PGP/PGM300 Series
PGP/PGM400 Series

Cast Iron Bushing Design

Catalog HY09-0300/US

TRIDENT PRECISION INTERNATIONAL

151,SECTOR -06, IMT MANESAR,

GURGAON,HARYANA,122050

0124-4101151 **WWW.TRIDENT PRECISION.IN** **sales@tridentprecision.in**

The Parker Hannifin Gear Pump Division Assures:

- Consistent quality
- Technical innovation
- Premier customer service

Worldwide Sales and Service

Parker operates sales and service centers in major industrial areas worldwide. Call 1-800-C-PARKER for more information, or for a synopsis of the Gear Pump Division, contact a Parker representative.

The Gear Pump Division's ability to engineer specialty products for unique applications has kept us at the forefront of technology, and ensured our position as the industry leader. Our success has come from providing a quality product with excellent sales and service support.

We manufacture hydraulic components for a wide range of industries including:

- Material Handling
- Construction
- Turf Care
- Forestry
- Agriculture
- Industrial

T+P
TRIDENT PRECISION INTERNATIONAL
151,SECTOR -06, IMT MANESAR,
GURGAON,HARYANA,122050
0124-4101151 WWW.TRIDENT PRECISION.IN sales@tridentprecision.in

PGP/PGM300 Series

Ordering Information 4
General Information 12
PL Factor 13
General Data 14
Porting 15
Drive Shaft 15
Performance Curves 16
Dimensional Data 17
PGP/PGM315 Series Pump Performance Data ... 18
PGP/PGM330 Series Pump Performance Data ... 19
PGP/PGM350 Series Pump Performance Data ... 20
PGP/PGM365 Series Pump Performance Data ... 21

PGP/PGM400 Series

Dimensional Data 22
Special Assemblies 24
Offer of Sale 26

TRIDENT PRECISION INTERNATIONAL
151,SECTOR -06, IMT MANESAR,
GURGAON,HARYANA,122050
0124-4101151
WWW.TRIDENT PRECISION.IN
sales@tridentprecision.in

PGP/PGM315 Series Coding

Tandem: Repeat if Necessary

(1)	(2)	(3)	(4)	(5)	(6)	(7)	(8)	(9)	(6)	(7)	(10)
P G	3	1	5								

Pump/Motor (1)

P	Pump (PE for fluorocarbon seals)
M	Motor (no tandem motors available)

Unit (2)

A	Single Unit
B	Tandem Unit (flush studs)
L	Unit with Extended Studs

Shaft End Cover (3)

1	Pump, cw w/o O.B. bearing
2	Pump, ccw w/o O.B. bearing
4	Pump, cw with O.B. bearing (Code 490 Only)
5	Pump, ccw with O.B. bearing (Code 590 Only)
9	Motor, bi-rot w/o O.B. bearing + 1/4" ODT drain

Shaft End Cover (4)

89	SAE 2 bolt for clutch
90	4 bolt 72x100mm 80mm pilot
93	SAE "A" 2 bolt
95	Pad Mount for Clutch
96	SAE "B" 2 bolt

Gear Housing (6)

AB	Pump
EB	Motor

Port End Cover (5)

(Side Ported)

IN	OUT	CW	CCW
•	•	•	•
SAE Split Flange (pump)			
1"	3/4"	**EJ**	**JE**
1"	1/2"	**EK**	**KE**
3/4"	3/4"	**EL**	**LE**
3/4"	1/2"	**EM**	**ME**
1"	-	**OE**	**EO**
3/4"	-	**OF**	**FO**
-	3/4"	**OJ**	**JO**
-	1/2"	**OL**	**LO**
SAE Split Flange (motor)			
1"	1"	**DR**-Double	
3/4"	3/4"	**DS**-Double	
National Pipe Thread (pump)			
1-1/4"	1"	**AJ**	**JA**
1-1/4"	3/4"	**AK**	**KA**
1"	1"	**AL**	**LA**
1"	3/4"	**AM**	**MA**
3/4"	3/4"	**AR**	**RA**
National Pipe Thread (motor)			
1"	1"	**DM**-Double	
3/4"	3/4"	**DN**-Double	
1/2"	1/2"	**DQ**-Double	
Unported (pump)			
BI	Unported		
OD Tube Porting (pump)			
1-1/4"	1"	**FB**	**BF**
1-1/4"	7/8"	**FC**	**CF**
1-1/4"	3/4"	**FG**	**GF**
1-1/4"	5/8"	**FJ**	**JF**
1"	1"	**FL**	**LF**
1"	7/8"	**FV**	**VF**
1"	3/4"	**FW**	**WF**
1"	5/8"	**FX**	**XF**
7/8"	7/8"	**FY**	**YF**
7/8"	3/4"	**FZ**	**ZF**
7/8"	5/8"	**BC**	**CB**
7/8"	1/2"	**BG**	**GB**
3/4"	3/4"	**BJ**	**JB**
3/4"	5/8"	**BL**	**LB**
3/4"	1/2"	**BN**	**NB**
1 1/4"	-	**BV**	**VB**
1"	-	**BW**	**WB**
7/8"	-	**BX**	**XB**
3/4"	-	**BY**	**YB**
-	1"	**BZ**	**ZB**
-	7/8"	**PD**	**DP**
-	3/4"	**PE**	**EP**
-	5/8"	**PM**	**MP**
-	1/2"	**PN**	**NP**

(Side Ported) (cont.)

IN	OUT	CW	CCW
•	•	•	•
OD Tube Porting (motor)			
1"	1"	**VN**-Double	
3/4"	3/4"	**VR**-Double	
1/2"	1/2"	**VQ**-Double	
BSPP Porting (pump)			
1-1/4"	1"	**FN**	**NF**
1-1/4"	7/8"	**FP**	**PF**
1-1/4"	3/4"	**FR**	**RF**
1"	1"	**FS**	**SF**
1"	7/8"	**FT**	**TF**
1"	3/4"	**BP**	**PB**
7/8"	7/8"	**BQ**	**QB**
7/8"	3/4"	**BR**	**RB**
7/8"	1/2"	**BT**	**TB**
3/4"	3/4"	**BU**	**UB**
3/4"	1/2"	**PQ**	**QP**
1-1/4"	-	**PR**	**RP**
1"	-	**PS**	**SP**
7/8"	-	**PT**	**TP**
3/4"	-	**PV**	**VP**
-	1"	**PW**	**WP**
-	7/8"	**PX**	**XP**
-	3/4"	**PY**	**YP**
-	1/2"	**PZ**	**ZP**
BSPP Porting (motor)			
1"	1"	**VY**-Double	
3/4"	3/4"	**VZ**-Double	
1/2"	1/2"	**VV**-Double	
Metric Split Flange (pump)			
1"	3/4"	**EV**	**VE**
1"	1/2"	**EW**	**WE**
3/4"	3/4"	**EX**	**XE**
3/4"	1/2"	**EY**	**YE**
1"	0"	**OP**	**PO**
3/4"	0"	**OR**	**RO**
0"	3/4"	**OT**	**TO**
0"	1/2"	**OV**	**VO**
Metric Split Flange (motor)			
1"	1"	**DV**-Double	
3/4"	3/4"	**DW**-Double	

(Rear Ported)

IN	OUT	CW	CCW
•	•	•	•
OD Tube Porting (pump)			
1-1/4"	1"	**UC**	**CU**
1-1/4"	7/8"	**UF**	**FU**
1-1/4"	3/4"	**UN**	**NU**
1"	1"	**UD**	**DU**
1"	7/8"	**UP**	**PU**
1"	3/4"	**UQ**	**QU**
1"	5/8"	**UR**	**RU**
7/8"	7/8"	**LN**	**NL**
7/8"	3/4"	**LP**	**PL**
7/8"	5/8"	**LQ**	**QL**
3/4"	3/4"	**LR**	**RL**
3/4"	5/8"	**LS**	**SL**
3/4"	1/2"	**LT**	**TL**
OD Tube Porting (motor)			
1"	1"	**RN**-Double	
3/4"	3/4"	**RQ**-Double	
1/2"	1/2"	**RS**-Double	
BSPP Porting (pump)			
1-1/4"	1"	**US**	**SU**
1-1/4"	7/8"	**UT**	**TU**
1-1/4"	3/4"	**UV**	**VU**
1"	1"	**UW**	**WU**
1"	7/8"	**UX**	**XU**
1"	3/4"	**UY**	**YU**
7/8"	7/8"	**LU**	**UL**
7/8"	3/4"	**LV**	**VL**
3/4	3/4	**LX**	**XL**
3/4	1/2"	**LZ**	**ZL**
BSPP Porting (motor)			
1"	1"	**RT**-Double	
3/4"	3/4"	**RV**-Double	
1/2"	1/2"	**RW**-Double	
National Pipe Thread (motor)			
1"	1"	**RX**-Double	
3/4"	3/4"	**RY**-Double	
1/2"	1/2"	**RZ**-Double	

T+P
TRIDENT PRECISION INTERNATIONAL
151,SECTOR -06, IMT MANESAR,
GURGAON,HARYANA,122050
0124-4101151
WWW.TRIDENT PRECISION.IN
sales@tridentprecision.in

PGP/PGM315 Series - Coding

Cast Iron Bushing Design

Gear Width (7)

	Gear Width	in.³/rev.	cm³/rev.	Max Pressure
03	3/8"	.47	7.6	3500psi (241 bar)
05	1/2"	.62	10.2	3500psi (241 bar)
06	5/8"	.78	12.7	3500psi (241 bar)
07	3/4"	.93	15.2	3500psi (241 bar)
08	7/8"	1.09	17.8	3500psi (241 bar)
10	1"	1.24	20.3	3500psi (241 bar)
11	1-1/8"	1.40	22.9	3500psi (241 bar)
12	1-1/4"	1.55	25.4	3500psi (241 bar)
13	1-3/8"	1.71	27.9	3500psi (241 bar)
15	1-1/2"	1.86	30.5	3300psi (228 bar)
16	1-5/8"	2.02	33.0	3100psi (214 bar)
17	1-3/4"	2.17	35.6	2900psi (200 bar)
18	1-7/8"	2.33	38.1	2700psi (186 bar)
20	2"	2.48	40.6	2500psi (172 bar)

Shaft Type (8)

(For Single or Tandem Units -unless noted)

97 SAE "A"Keyed
96 SAE "A" Splined
66 SAE "B" Keyed
65 SAE "B" Splined
60 Tapered, M12 x 1.5 thd. 3x5 mm Keyed; 1:5 taper (90 SEC Only)
56 Clutch Pump Tapered, 5/16 - 24 thd. (internal), #6 Woodruff Keyed (single unit only); 1:4 taper

Bearing Carriers (9)

(Dual Outlet - Pump Only)

Outlets: for clockwise porting the top port number comes first; for counter-clockwise porting the bottom port number comes first.

IN	OUT		CW	CCW
•	•		•	•
SAE Split Flange				
1-1/4"	3/4"	3/4"	CA	AC
1-1/4"	3/4"	1/2"	DA	AD
1-1/4"	1/2"	1/2"	EA	AE
1"	3/4"	3/4"	FA	AF
1"	3/4"	1/2"	GA	AG
1"	1/2"	1/2"	HA	AH
OD Tube Porting				
1-1/2"	1"	1"	JG	GJ
1-1/2"	1"	7/8"	KG	GK
1-1/2"	7/8"	7/8"	LG	GL
1-1/2"	1"	3/4"	MG	GM
1-1/2"	3/4"	3/4"	NG	GN
1-1/4"	1"	1"	PG	GP
1-1/4"	1"	7/8"	QG	GQ
1-1/4"	7/8"	7/8"	RG	GR
1-1/4"	1"	3/4"	SG	GS
1-1/4"	3/4"	3/4"	TG	GT
1-1/4"	3/4"	5/8"	UG	GU
1-1/4"	3/4"	1/2"	VG	GV
1-1/4"	5/8"	5/8"	WG	GW
1-1/4"	1/2"	1/2"	XG	GX
1"	1"	1"	YG	GY
1"	1"	7/8"	ZG	GZ
1"	7/8"	7/8"	RC	CR
1"	1"	3/4"	SC	CS
1"	3/4"	3/4"	TC	CT
1"	3/4"	5/8"	VC	CV
1"	3/4"	1/2"	WC	CW
1"	5/8"	5/8"	XC	CX
1"	1/2"	1/2"	YC	CY

(Dual Outlet - Pump Only)

Outlets: for clockwise porting the top port number comes first; for counter-clockwise porting the bottom port number comes first.

IN	OUT		CW	CCW
•	•		•	•
Metric Split Flange				
1-1/4"	3/4"	3/4"	BD	DB
1-1/4"	3/4"	1/2"	CD	DC
1-1/4"	1/2"	1/2"	ED	DE
1"	3/4"	3/4"	FD	DF
1"	3/4"	1/2"	GD	DG
1"	1/2"	1/2"	HD	DH
BSPP Porting				
1-1/2"	1"	1"	HJ	JH
1-1/2"	1"	7/8"	KJ	JK
1-1/2"	7/8"	7/8"	LJ	JL
1-1/2"	1"	3/4"	MJ	JM
1-1/2"	3/4"	3/4"	NJ	JN
1-1/4"	1"	1"	PJ	JP
1 1/4"	1"	7/8"	QJ	JQ
1-1/4"	7/8"	7/8"	RJ	JR
1-1/4"	1"	3/4"	SJ	JS
1-1/4"	3/4"	3/4"	TJ	JT
1-1/4"	3/4"	1/2"	UJ	JU
1-1/4"	1/2"	1/2"	VJ	JV
1"	1"	1"	WJ	JW
1"	1"	7/8"	XJ	JX
1"	7/8"	7/8"	YJ	JY
1"	1"	3/4"	ZJ	JZ
1"	3/4"	3/4"	JD	DJ
1"	3/4"	1/2"	KD	DK
1"	1/2"	1/2"	LD	DL

(Single Outlet - Pump Only)

Outlet for front section.

IN	OUT	CW	CCW
•	•	•	•
SAE Split Flange			
1-1/4"	1-1/4"	CJ	JC
1-1/4"	1"	CL	LC
1-1/4"	3/4"	CM	MC
1-1/4"	1/2"	HB	BH
1"	1"	HC	CH
1"	3/4"	HF	FH
1"	1/2"	HL	LH
3/4"	3/4"	HM	MH
3/4"	1/2"	HN	NH
OD Tube Porting			
1-1/2"	1-1/2"	KB	BK
1-1/2"	1-1/4"	KC	CK
1-1/2"	1"	KF	FK
1-1/2"	7/8"	KL	LK
1-1/2"	3/4"	KM	MK
1-1/4"	1-1/4"	KN	NK
1-1/4"	1"	KO	OK
1-1/4"	7/8"	KP	PK
1-1/4"	3/4"	KQ	QK
1-1/4"	5/8"	MB	BM
1-1/4"	1/2"	ML	LM
1"	1"	MN	NM
1"	7/8"	MQ	QM
1"	3/4"	MR	RM
1"	5/8"	MS	SM
1"	1/2"	MT	TM
3/4"	3/4"	MU	UM
3/4"	5/8"	MV	VM
3/4"	1/2"	MW	WM

(Single Outlet - Pump Only)

Outlet for front section.

IN	OUT	CW	CCW
•	•	•	•
Metric Split Flange			
1-1/4"	1-1/4"	CN	NC
1-1/4"	1"	CP	PC
1-1/4"	3/4"	CQ	QC
1-1/4"	1/2"	HR	RH
1"	1"	HS	SH
1"	3/4"	HT	TH
1"	1/2"	HU	UH
3/4"	3/4"	HV	VH
3/4"	1/2"	HW	WH
BSPP Porting			
1-1/2"	1-1/2"	KR	RK
1-1/2"	1-1/4"	KS	SK
1-1/2"	1"	KT	TK
1 1/2"	7/8"	KU	UK
1-1/2"	3/4"	KV	VK
1-1/4"	1-1/4"	KW	WK
1-1/4"	1"	KX	XK
1-1/4"	7/8"	KY	YK
1-1/4"	3/4"	KZ	ZK
1-1/4"	1/2"	HO	OH
1"	1"	HP	PH
1"	7/8"	HQ	QH
1"	3/4"	HX	XH
1"	1/2"	HY	YH
3/4"	3/4"	HZ	ZH
3/4"	1/2"	MX	XM
Common Inlet Passage			
No Ports		C	D

Connecting Shaft (10)

For connecting tandem units.
1 Connecting Shaft

T+P
TRIDENT PRECISION INTERNATIONAL
151,SECTOR -06, IMT MANESAR,
GURGAON,HARYANA,122050
0124-4101151
WWW.TRIDENT PRECISION.IN
sales@tridentprecision.in

PGP/PGM330 Series Coding

Tandem: Repeat if Necessary

(1)	(2)	(3)	(4)	(5)	(6)	(7)	(8)	(9)	(6)	(7)	(10)
P G	3 3 0										

Pump/Motor (1)

P	Pump
M	Motor

Unit (2)

A	Single Unit
B	Tandem Unit (flush studs)
C	Single or Tandem with two-piece shaft (O.B. bearing required)
L	Unit with Extended Studs

Shaft End Cover (3)

1	Pump, cw w/o O.B. bearing
2	Pump, ccw w/o O.B. bearing
4	Pump, cw with O.B. bearing
5	Pump, ccw with O.B. bearing
8	Motor, bi-rot w/ O.B. bearing + 1/4" ODT drain
9	Motor, bi-rot w/o O.B. bearing + 1/4" ODT drain
18	Motor, bi-rot w/ O.B. bearing + 1/4" BSPP drain (78 only)
19	Motor, bi-rot w/o O.B. bearing + 1/4" BSPP drain (42 & 78 only)

Shaft End Cover (4)

42	SAE "B" 4 bolt
78	SAE "C" 4 bolt
97	SAE "B" 2 bolt

Port End Cover (5)

(Side Ported)

IN	OUT	CW	CCW
•	•	•	•
SAE Split Flange (pump)			
1-1/2"	1-1/4"	**EJ**	**JE**
1-1/2"	1"	**EK**	**KE**
1-1/4"	1-1/4"	**EL**	**LE**
1-1/4"	1"	**EM**	**ME**
1"	1"	**EN**	**NE**
1-1/2"	-	**OF**	**FO**
1-1/4"	-	**OG**	**GO**
1"	-	**OJ**	**JO**
-	1-1/4"	**OM**	**MO**
-	1"	**ON**	**NO**
SAE Split Flange (motor)			
1-1/4"	1-1/4"	**CS**-Double	
1"	1"	**CT**-Double	
3/4"	3/4"	**CV**-Double	
OD Tube Porting (pump)			
1-1/4"	1"	**FJ**	**JF**
1"	1"	**FL**	**LF**
1-1/4"	-	**BG**	**GB**
1"	-	**BJ**	**JB**
-	1"	**BN**	**NB**
OD Tube Porting (motor)			
1 1/4"	1 1/4"	**VC**-Double	
1"	1"	**VN**-Double	
3/4"	3/4"	**VR**-Double	
Metric Split Flange (pump)			
1-1/2"	1-1/4"	**EV**	**VE**
1-1/2"	1"	**EW**	**WE**
1-1/4"	1-1/4"	**EX**	**XE**
1 1/4"	1"	**EY**	**YE**
1"	1"	**EZ**	**ZE**
1-1/2"	-	**OR**	**RO**
1 -1/4"	-	**OS**	**SO**
1"	-	**OT**	**TO**
-	1-1/4"	**OW**	**WO**
-	1"	**OX**	**XO**

(Side Ported)

IN	OUT	CW	CCW
•	•	•	•
Unported (pump)			
BI	Unported		
Unported (motor)			
BA	Unported		
Metric Split Flange (motor)			
1-1/4"	1-1/4"	**CX**-Double	
1"	1"	**CY**-Double	
3/4"	3/4"	**CZ**-Double	
Metric Straight Thread (motor)			
1-1/4"	1-1/4"	**VS**-Double	
1"	1"	**VT**-Double	
3/4"	3/4"	**VW**-Double	
BSPP Porting (pump)			
1-1/4"	1"	**FS**	**SF**
1"	1"	**FT**	**TF**
1-1/4"	-	**BQ**	**QB**
1"	-	**BR**	**RB**
-	1"	**BU**	**UB**
BSPP Porting (motor)			
1-1/4"	1-1/4"	**VX**-Double	
1"	1"	**VY**-Double	
3/4"	3/4"	**VZ**-Double	

Gear Housing (6)

AB	Pump
EB	Motor

T+P
TRIDENT PRECISION INTERNATIONAL
151,SECTOR -06, IMT MANESAR,
GURGAON,HARYANA,122050
0124-4101151
WWW.TRIDENT PRECISION.IN
sales@tridentprecision.in

PGP/PGM330 Series - Coding

Cast Iron Bushing Design

Gear Width (7)

	Gear Width	in.³/rev.	cm³/rev.	Max Pressure
05	1/2"	.99	16.1	3500psi (241 bar)
07	3/4"	1.48	24.2	3500psi (241 bar)
10	1"	1.97	32.3	3500psi (241 bar)
12	1-1/4"	2.46	40.4	3500psi (241 bar)
15	1-1/2"	2.96	48.4	3500psi (241 bar)
17	1-3/4"	3.45	56.5	3250psi (224 bar)
20	2"	3.94	64.6	3000psi (207 bar)

Shaft Type (8)

(For Single or Tandem Units -unless noted)

7	SAE "C" Spline (two-piece only)
25	SAE "B" Spline
30	SAE "B" Keyed
98	SAE "BB" Splined
43	SAE "BB" Keyed

Bearing Carriers (9)

(Dual Outlet - Pump Only)

Outlets: for clockwise porting the top port number comes first; for counter-clockwise porting the bottom port number comes first.

IN	OUT		CW	CCW
•	•		•	•
SAE Split Flange				
2"	1-1/4"	1-1/4"	**AM**	**MA**
2"	1-1/4"	1"	**AN**	**NA**
2"	1"	1"	**AP**	**PA**
1-1/2"	1-1/4"	1-1/4"	**AT**	**TA**
1-1/2"	1-1/4"	1"	**AU**	**UA**
1-1/2"	1"	1"	**AV**	**VA**
1-1/4"	1-1/4"	1-1/4"	**AW**	**WA**
1-1/4"	1-1/4"	1"	**AX**	**XA**
*1-1/4"	1"	1"	**AY**	**YA**
1"	1"	1"	**AZ**	**ZA**
Metric Split Flange				
2"	1-1/4"	1-1/4"	**DM**	**MD**
2"	1-1/4"	1"	**DN**	**ND**
2"	1"	1"	**DP**	**PD**
1-1/2"	1-1/4"	1-1/4"	**DT**	**TD**
1-1/2"	1-1/4"	1"	**DU**	**UD**
1-1/2"	1"	1"	**DV**	**VD**
1-1/4"	1-1/4"	1-1/4"	**DW**	**WD**
1-1/4"	1-1/4"	1"	**DX**	**XD**
1"	1"	1"	**DZ**	**ZD**
OD Tube Porting				
1-1/2"	1"	1"	**GV**	**VG**
1-1/4"	1"	1"	**GY**	**YG**
1"	1"	1"	**GZ**	**ZG**

(Single Outlet - Pump Only)

Outlet for front section.

IN	OUT	CW	CCW
•	•	•	•
SAE Split Flange			
2"	1-1/2"	**HB**	**BH**
2"	1-1/4"	**HC**	**CH**
2"	1"	**HF**	**FH**
1-1/2"	1-1/2"	**HL**	**LH**
1-1/2"	1-1/4"	**HM**	**MH**
1-1/2"	1"	**HN**	**NH**
1-1/4"	1-1/4"	**HO**	**OH**
1-1/4"	1"	**HP**	**PH**
1"	1"	**HQ**	**QH**
1-1/4"	1"	**RS**	**SR**
OD Tube Porting			
1 1/2"	1 1/4" -	**KM**	**MK**
1 1/2"	1" -	**KN**	**NK**
1 1/4"	1 1/4" -	**KO**	**OK**
1 1/4"	1" -	**KP**	**PK**
1"	1" -	**KQ**	**QK**
Metric Split Flange			
2"	1-1/2"	**HR**	**RH**
2"	1-1/4"	**HS**	**SH**
2"	1"	**HT**	**TH**
1-1/2"	1-1/2"	**HU**	**UH**
1-1/2"	1-1/4"	**HV**	**VH**
1-1/2"	1"	**HW**	**WH**
1-1/4"	1-1/4"	**HX**	**XH**
1-1/4"	1"	**HY**	**YH**
1"	1"	**HZ**	**ZH**

(Combined Outlet)

Outlet for front section.

IN	OUT	CW	CCW
•	•	•	•
SAE Split Flange (pump)			
2"	1-1/2"	**UN**	**NU**
2"	1-1/4"	**UO**	**OU**
1-1/2"	1-1/2"	**UP**	**PU**
1-1/2"	1-1/4"	**UQ**	**QU**
1-1/4"	1-1/4"	**UR**	**RU**
SAE Split Flange (motor)			
1-1/2"	1-1/2"	**BB**-Double	
1-1/4"	1-1/4"	**CC**-Double	
1"	1"	**EE**-Double	
3/4"	3/4"	**FF**-Double	
OD Tube Porting (pump)			
1-1/2"	1-1/4"	**PQ**	**QP**
1-1/4"	1-1/4"	**PR**	**RP**
OD Tube Porting (motor)			
1-1/4"	1-1/4"	**NN**-Double	
1"	1"	**QQ**-Double	
3/4"	3/4"	**RR**-Double	
Common Inlet Passage (pump)			
No Ports		**C**	**D**

(Combined Outlet)

Outlet for front section.

IN	OUT	CW	CCW
•	•	•	•
Metric Split Flange (motor)			
1-1/2"	1-1/2"	**HH**-Double	
1-1/4"	1-1/4"	**JJ**-Double	
1"	1"	**KK**-Double	
3/4"	3/4"	**LL**-Double	
BSPP Porting (motor)			
1-1/4"	1-1/4"	**XX**-Double	
1"	1"	**YY**-Double	
3/4"	3/4"	**ZZ**-Double	
Metric Straight Thread (motor)			
1-1/4"	1-1/4"	**TT**-Double	
1"	1"	**UU**-Double	
3/4"	3/4"	**VV**-Double	

* Outlet port for rear section.

Connecting Shaft (10)

For connecting tandem units.

1 Connecting Shaft

T+P
TRIDENT PRECISION INTERNATIONAL
151,SECTOR -06, IMT MANESAR,
GURGAON,HARYANA,122050
0124-4101151
WWW.TRIDENT PRECISION.IN
sales@tridentprecision.in

PGP/PGM350 Series Coding

Tandem: Repeat if Necessary

(1)	(2)	(3)	(4)	(5)	(6)	(7)	(8)	(9)	(6)	(7)	(10)
P G	3	5	0								

Pump/Motor (1)

P	Pump
M	Motor

Unit (2)

A	Single Unit
B	Tandem Unit (flush studs)
C	Single or Tandem with two-piece shaft (O.B. bearing required)
L	Unit with Extended Studs

Shaft End Cover (3)

1	Pump, cw w/o O.B. bearing
2	Pump, ccw w/o O.B. bearing
4	Pump, cw with O.B. bearing
5	Pump, ccw with O.B. bearing
8	Motor, bi-rot w/ O.B. bearing + 1/4" ODT drain
9	Motor, bi-rot w/o O.B. bearing + 1/4" ODT drain
18	Motor, bi-rot w/ O.B. bearing + 1/4" BSPP drain (78 only)
19	Motor, bi-rot w/o O.B. bearing + 1/4" BSPP drain (42 & 78 only)

Shaft End Cover (4)

42	SAE "B" 4 bolt
46	SAE "B" 2/4 bolt
62	"ZF" 4 bolt (462 only) - 80 mm pilot, 80x80 mm
78	SAE "C" 4 bolt
97	SAE "B" 2 bolt
98	SAE "C" 2 bolt

Port End Cover (5)

(Side Ported)

IN	OUT	CW	CCW
•	•	•	•
SAE Split Flange (pump)			
2"	1-1/2"	**EC**	**CE**
2"	1-1/4"	**EF**	**FE**
2"	1"	**EG**	**GE**
1-1/2"	1-1/2"	**EH**	**HE**
1-1/2"	1-1/4"	**EJ**	**JE**
1-1/2"	1"	**EK**	**KE**
1-1/4"	1-1/4"	**EL**	**LE**
1-1/4"	1"	**EM**	**ME**
1"	1"	**EN**	**NE**
2"	-	**OE**	**EO**
1-1/2"	-	**OF**	**FO**
1-1/4"	-	**OG**	**GO**
1"	-	**OJ**	**JO**
-	1-1/2"	**OL**	**LO**
-	1-1/4"	**OM**	**MO**
-	1"	**ON**	**NO**
SAE Split Flange (motor)			
1-1/2"	1-1/2"	**CR**-Double	
1-1/4"	1-1/4"	**CS**-Double	
1"	1"	**CT**-Double	
3/4"	3/4"	**CV**-Double	
OD Tube Porting (pump)			
1-1/2"	1-1/4"	**FB**	**BF**
1-1/2"	1"	**FC**	**CF**
1-1/4"	1-1/4"	**FG**	**GF**
1-1/4"	1"	**FJ**	**JF**
1"	1"	**FL**	**LF**
1-1/2"	-	**BC**	**CB**
1-1/4"	-	**BG**	**GB**
1"	-	**BJ**	**JB**
-	1-1/4"	**BL**	**LB**
-	1"	**BN**	**NB**
OD Tube Porting (motor)			
1-1/4"	1-1/4"	**VC**-Double	
1"	1"	**VN**-Double	
3/4"	3/4"	**VR**-Double	
Unported (pump)			
Unported		**BI**	**IB**
Unported (motor)			
BA Unported			

(Side Ported)

IN	OUT	CW	CCW
•	•	•	•
Metric Split Flange (pump)			
2"	1-1/2"	**ER**	**RE**
2"	1-1/4"	**ES**	**SE**
2"	1"	**ET**	**TE**
1-1/2"	1-1/2"	**EU**	**UE**
1-1/2"	1-1/4"	**EV**	**VE**
1-1/2"	1"	**EW**	**WE**
1-1/4"	1-1/4"	**EX**	**XE**
1-1/4"	1"	**EY**	**YE**
1"	1"	**EZ**	**ZE**
2"	-	**OP**	**PO**
1-1/2"	-	**OR**	**RO**
1-1/4"	-	**OS**	**SO**
1"	-	**OT**	**TO**
-	1-1/2"	**OV**	**VO**
-	1-1/4"	**OW**	**WO**
-	1"	**OX**	**XO**
Metric Split Flange (motor)			
1-1/2"	1-1/2"	**CW**-Double	
1-1/4"	1-1/4"	**CX**-Double	
1"	1"	**CY**-Double	
3/4"	3/4"	**CZ**-Double	
Metric Straight Thread (motor)			
1-1/4"	1-1/4"	**VS**-Double	
1"	1"	**VT**-Double	
3/4"	3/4"	**VW**-Double	
BSPP Porting (pump)			
1-1/2"	1-1/4"	**FN**	**NF**
1-1/2"	1"	**FP**	**PF**
1-1/4"	1-1/4"	**FR**	**RF**
1-1/4"	1"	**FS**	**SF**
1"	1"	**FT**	**TF**
1-1/2"	-	**BP**	**PB**
1-1/4"	-	**BQ**	**QB**
1"	-	**BR**	**RB**
-	1-1/4"	**BT**	**TB**
-	1"	**BU**	**UB**
BSPP Porting (motor)			
1-1/4"	1-1/4"	**VX**-Double	
1"	1"	**VY**-Double	
3/4"	3/4"	**VZ**-Double	

Gear Housing (6)

AB	Pump
EB	Motor

T+P
TRIDENT PRECISION INTERNATIONAL
151,SECTOR -06, IMT MANESAR,
GURGAON,HARYANA,122050
0124-4101151
WWW.TRIDENT PRECISION.IN
sales@tridentprecision.in

PGP/PGM350 Series - Coding

Cast Iron Bushing Design

Gear Width (7)

	Gear Width	in.³/rev.	cm³/rev.	Max Pressure
05	1/2"	1.28	20.9	3500psi (241 bar)
07	3/4"	1.91	31.3	3500psi (241 bar)
10	1"	2.55	41.8	3500psi (241 bar)
12	1-1/4"	3.19	52.2	3500psi (241 bar)
15	1-1/2"	3.83	62.7	3500psi (241 bar)
17	1-3/4"	4.46	73.1	3250psi (224 bar)
20	2"	5.10	83.6	3000psi (207 bar)
22	2-1/4"	5.74	94.0	2750psi (190 bar)
25	2-1/2"	6.38	104.5	2500psi (172 bar)

Shaft Type (8)

(For Single, Tandem or Two-piece Shaft -unless noted)

6	88X32X36 DIN 5462 Spline (two-piece only)
7	SAE "C" Spline
11	SAE "C" Keyed
25	SAE "B" Spline
43	SAE "BB" Keyed
73	SAE "C" Keyed Long (single and two-piece only)
98	SAE "BB" Splined (tandem only)

Bearing Carriers (9)

(Dual Outlet - Pump Only)

Outlets: for clockwise porting the top port number comes first; for counter-clockwise porting the bottom port number comes first.

IN	OUT		CW	CCW
•	•		•	•
SAE Split Flange				
2-1/2"	1-1/4"	1-1/4"	**AF**	**FA**
2-1/2"	1-1/4"	1"	**AG**	**GA**
2-1/2"	1"	1"	**AH**	**HA**
2"	1-1/4"	1-1/4"	**AM**	**MA**
2"	1-1/4"	1"	**AN**	**NA**
2"	1"	1"	**AP**	**PA**
1-1/2"	1-1/4"	1-1/4"	**AT**	**TA**
1-1/2"	1-1/4"	1"	**AU**	**UA**
1-1/2"	1"	1"	**AV**	**VA**
1-1/4"	1-1/4"	1-1/4"	**AW**	**WA**
1-1/4"	1-1/4"	1"	**AX**	**XA**
1-1/4"	1"	1"	**AY**	**YA**
1"	1"	1"	**AZ**	**ZA**
Metric Split Flange				
2"	1-1/4"	1-1/4"	**DM**	**MD**
2"	1-1/4"	1"	**DN**	**ND**
2"	1"	1"	**DP**	**PD**
1-1/2"	1-1/4"	1-1/4"	**DT**	**TD**
1-1/2"	1-1/4"	1"	**DU**	**UD**
1-1/2"	1"	1"	**DV**	**VD**
1-1/4"	1-1/4"	1-1/4"	**DW**	**WD**
1-1/4"	1-1/4"	1"	**DX**	**XD**
1-1/4"	1"	1"	**DY**	**YD**
1"	1"	1"	**DZ**	**ZD**
OD Tube Porting				
2"	1-1/4"	1-1/4"	**GM**	**MG**
2"	1-1/4"	1"	**GN**	**NG**
2"	1"	1"	**GP**	**PG**
1-1/2"	1-1/4"	1-1/4"	**GT**	**TG**
1-1/2"	1-1/4"	1"	**GU**	**UG**
1-1/2"	1"	1"	**GV**	**VG**
1-1/4"	1-1/4"	1-1/4"	**GW**	**WG**
1-1/4"	1-1/4"	1"	**GX**	**XG**
1-1/4"	1"	1"	**GY**	**YG**
1"	1"	1"	**GZ**	**ZG**

(Single Outlet - Pump Only)

Outlet for front section.

IN	OUT	CW	CCW
•	•	•	•
SAE Split Flange			
2"	1-1/2"	**HB**	**BH**
2"	1-1/4"	**HC**	**CH**
2"	1"	**HF**	**FH**
1-1/2"	1-1/2"	**HL**	**LH**
1-1/2"	1-1/4"	**HM**	**MH**
1-1/2"	1"	**HN**	**NH**
1-1/4"	1-1/4"	**HO**	**OH**
1-1/4"	1"	**HP**	**PH**
* 1"	1"	**HQ**	**QH**
1-1/4"	1"	**RS**	**SR**
OD Tube Porting			
2"	1-1/2"	**KB**	**BK**
2"	1-1/4"	**KC**	**CK**
2"	1"	**KF**	**FK**
1-1/2"	1-1/2"	**KL**	**LK**
1-1/2"	1-1/4"	**KM**	**MK**
1-1/2"	1"	**KN**	**NK**
1-1/4"	1-1/4"	**KO**	**OK**
1-1/4"	1"	**KP**	**PK**
1"	1"	**KQ**	**QK**
BSPP Porting			
2"	1-1/2"	**KR**	**RK**
2"	1-1/4"	**KS**	**SK**
2"	1"	**KT**	**TK**
1-1/2"	1-1/2"	**KU**	**UK**
1-1/2"	1-1/4"	**KV**	**VK**
1-1/2"	1"	**KW**	**WK**
1-1/4"	1-1/4"	**KX**	**XK**
1-1/4"	1"	**KY**	**YK**
1"	1"	**KZ**	**ZK**

(Combined Outlet)

Outlet for front section.

IN	OUT	CW	CCW
•	•	•	•
SAE Split Flange (pump)			
2"	1-1/2"	**UN**	**NU**
2"	1-1/4"	**UO**	**OU**
1-1/2"	1-1/2"	**UP**	**PU**
1-1/2"	1-1/4"	**UQ**	**QU**
1-1/4"	1-1/4"	**UR**	**RU**
SAE Split Flange (motor)			
2"	2"	**AA**-Double	
1-1/2"	1-1/2"	**BB**-Double	
1-1/4"	1-1/4"	**CC**-Double	
1"	1"	**EE**-Double	
3/4"	3/4"	**FF**-Double	
OD Tube Porting (pump)			
2"	1-1/2"	**PE**	**EP**
2"	1-1/4"	**PM**	**MP**
1-1/2"	1-1/2"	**PN**	**NP**
1-1/2"	1-1/4"	**PQ**	**QP**
1-1/4"	1-1/4"	**PR**	**RP**
OD Tube Porting (motor)			
1-1/2"	1-1/2"	**MM**-Double	
1-1/4"	1-1/4"	**NN**-Double	
1"	1"	**QQ**-Double	
3/4"	3/4"	**RR**-Double	
Common Inlet Passage			
No Ports		**C**	**D**
Metric Split Flange (motor)			
2"	2"	**GG**-Double	
1-1/2"	1-1/2"	**HH**-Double	
1-1/4"	1-1/4"	**JJ**-Double	
1"	1"	**KK**-Double	
3/4"	3/4"	**LL**-Double	

(Combined Outlet)

Outlet for front section.

IN	OUT	CW	CCW
•	•	•	•
BSPP Porting (motor)			
1-1/2"	1-1/2"	**WW**-Double	
1-1/4"	1-1/4"	**XX**-Double	
1"	1"	**YY**-Double	
3/4"	3/4"	**ZZ**-Double	
Metric Straight Thread (motor)			
1-1/2"	1-1/2"	**SS**-Double	
1-1/4"	1-1/4"	**TT**-Double	
1"	1"	**UU**-Double	
3/4"	3/4"	**VV**-Double	

* Outlet port for rear section.

Connecting Shaft (10)

For connecting tandem units.

1 Connecting Shaft

TRIDENT PRECISION INTERNATIONAL
151,SECTOR -06, IMT MANESAR,
GURGAON,HARYANA,122050
0124-4101151
WWW.TRIDENT PRECISION.IN
sales@tridentprecision.in

PGP/PGM365 Series Coding

Tandem: Repeat if Necessary

(1)		(2)	(3)	(4)	(5)	(6)	(7)	(8)	(9)	(6)	(7)	(10)
P G	3 6 5											

Pump/Motor (1)

P	Pump
M	Motor

Unit (2)

A	Single Unit
B	Tandem Unit (flush studs)
C	Single or Tandem with two-piece shaft (O.B. bearing required)
L	Unit with Extended Studs

Shaft End Cover (3)

1	Pump, cw w/o O.B. bearing
2	Pump, ccw w/o O.B. bearing
4	Pump, cw with O.B. bearing
5	Pump, ccw with O.B. bearing
8	Motor, bi-rot w/ O.B. bearing + 1/4" ODT drain
9	Motor, bi-rot w/o O.B. bearing + 1/4" ODT drain

Shaft End Cover (4)

42	SAE "B" 4 bolt
78	SAE "C" 4 bolt
97	SAE "B" 2 bolt
98	SAE "C" 2 bolt

Port End Cover (5)

(Side Ported)

IN	OUT	CW	CCW
•	•	•	•
SAE Split Flange (pump)			
2"	1-1/2"	**EC**	**CE**
2"	1-1/4"	**EF**	**FE**
2"	1"	**EG**	**GE**
1-1/2"	1-1/2"	**EH**	**HE**
1-1/2"	1-1/4"	**EJ**	**JE**
1-1/2"	1"	**EK**	**KE**
1-1/4"	1-1/4"	**EL**	**LE**
1-1/4"	1"	**EM**	**ME**
1"	1"	**EN**	**NE**
2"	-	**OE**	**EO**
1-1/2"	-	**OF**	**FO**
1-1/4"	-	**OG**	**GO**
1"	-	**OJ**	**JO**
-	1-1/2"	**OL**	**LO**
-	1-1/4"	**OM**	**MO**
-	1"	**ON**	**NO**
SAE Split Flange (motor)			
1-1/2"	1-1/2"	**CR**-Double	
1-1/4"	1-1/4"	**CS**-Double	
1"	1"	**CT**-Double	
3/4"	3/4"	**CV**-Double	
OD Tube Porting (pump)			
1-1/2"	1-1/4"	**FB**	**BF**
1-1/2"	1"	**FC**	**CF**
1-1/4"	1-1/4"	**FG**	**GF**
1-1/4"	1"	**FJ**	**JF**
1"	1"	**FL**	**LF**
1-1/2"	-	**BC**	**CB**
1-1/4"	-	**BG**	**GB**
1"	-	**BJ**	**JB**
-	1-1/4"	**BL**	**LB**
-	1"	**BN**	**NB**

(Side Ported)

IN	OUT	CW	CCW
•	•	•	•
OD Tube Porting (motor)			
1-1/4"	1-1/4"	**VC**-Double	
1"	1"	**VN**-Double	
3/4"	3/4"	**VR**-Double	
Unported (pump)			
Unported		**BI**	**IB**
Unported (motor)			
BA Unported			
Metric Split Flange (pump)			
2"	1-1/2"	**ER**	**RE**
2"	1-1/4"	**ES**	**SE**
2"	1"	**ET**	**TE**
1-1/2"	1-1/2"	**EU**	**UE**
1-1/2"	1-1/4"	**EV**	**VE**
1-1/2"	1"	**EW**	**WE**
1-1/4"	1-1/4"	**EX**	**XE**
1-1/4"	1"	**EY**	**YE**
1"	1"	**EZ**	**ZE**
2"	-	**OP**	**PO**
1-1/2"	-	**OR**	**RO**
1-1/4"	-	**OS**	**SO**
1"	-	**OT**	**TO**
-	1-1/2"	**OV**	**VO**
-	1-1/4"	**OW**	**WO**
-	1"	**OX**	**XO**
Metric Split Flange (motor)			
1-1/2"	1-1/2"	**CW**-Double	
1-1/4"	1-1/4"	**CX**-Double	
1"	1"	**CY**-Double	
3/4"	3/4"	**CZ**-Double	

(Side Ported)

IN	OUT	CW	CCW
•	•	•	•
Metric Straight Thread (motor)			
1-1/4"	1-1/4"	**VS**-Double	
1"	1"	**VT**-Double	
3/4"	3/4"	**VW**-Double	
BSPP Porting (pump)			
1-1/2"	1-1/4"	**FN**	**NF**
1-1/2"	1"	**FP**	**PF**
1-1/4"	1-1/4"	**FR**	**RF**
1-1/4"	1"	**FS**	**SF**
1"	1"	**FT**	**TF**
1-1/2"	-	**BP**	**PB**
1-1/4"	-	**BQ**	**QB**
1"	-	**BR**	**RB**
-	1-1/4"	**BT**	**TB**
-	1"	**BU**	**UB**
BSPP Porting (motor)			
1-1/4"	1-1/4"	**VX**-Double	
1"	1"	**VY**-Double	
3/4"	3/4"	**VZ**-Double	

Gear Housing (6)

AB	Pump
EB	Motor

Gear Width (7)

	Gear Width	in.³/rev.	cm³/rev.	Max Pressure
07	3/4"	2.70	44.3	3500psi (241 bar)
10	1"	3.60	59.0	3500psi (241 bar)
12	1-1/4"	4.50	73.8	3500psi (241 bar)
15	1-1/2"	5.40	88.5	3500psi (241 bar)
17	1-3/4"	6.30	103.3	3500psi (241 bar)
20	2"	7.20	118.0	3500psi (241 bar)
22	2-1/4"	8.10	132.8	3250psi (224 bar)
25	2-1/2"	9.00	147.5	3000psi (207 bar)

Shaft Type (8)

(For Single, Tandem or Two-piece Units -unless noted)

7	SAE "C" Spline (single and tandem only)
11	SAE "C" Keyed
25	SAE "B" Spline (single only)

T+P
TRIDENT PRECISION INTERNATIONAL
151,SECTOR -06, IMT MANESAR,
GURGAON,HARYANA,122050
0124-4101151
WWW.TRIDENT PRECISION.IN
sales@tridentprecision.in

Bearing Carriers (9)

(Dual Outlet - Pump Only)

Outlets: for clockwise porting the top port number comes first; for counter-clockwise porting the bottom port number comes first.

IN •	OUT •		CW •	CCW •
SAE Split Flange				
2-1/2"	1-1/2"	1-1/2"	AC	CA
2-1/2"	1-1/2"	1-1/4"	AD	DA
2-1/2"	1-1/2"	1"	AE	EA
2-1/2"	1-1/4"	1-1/4"	AF	FA
2-1/2"	1-1/4"	1"	AG	GA
2-1/2"	1"	1"	AH	HA
2"	1-1/2"	1-1/2"	AJ	JA
2"	1-1/2"	1-1/4"	AK	KA
2"	1-1/2"	1"	AL	LA
2"	1-1/4"	1-1/4"	AM	MA
2"	1-1/4"	1"	AN	NA
2"	1"	1"	AP	PA
1-1/2"	1-1/2"	1-1/2"	AQ	QA
1-1/2"	1-1/2"	1-1/4"	AR	RA
1-1/2"	1-1/2"	1"	AS	SA
1-1/2"	1-1/4"	1-1/4"	AT	TA
1-1/2"	1-1/4"	1"	AU	UA
1-1/2"	1"	1"	AV	VA
1-1/4"	1-1/4"	1-1/4"	AW	WA
1-1/4"	1-1/4"	1"	AX	XA
1-1/4"	1"	1"	AY	YA
1"	1"	1"	AZ	ZA
OD Tube Porting				
2"	1-1/2"	1 1/2"	GJ	JG
2"	1-1/2"	1 1/4"	GK	KG
2"	1-1/2"	1"	GL	LG
2"	1-1/4"	1 1/4"	GM	MG
2"	1-1/4"	1"	GN	NG
2"	1"	1"	GP	PG
1-1/2"	1-1/2"	1 1/2"	GQ	QG
1-1/2"	1-1/2"	1 1/4"	GR	RG
1-1/2"	1-1/2"	1"	GS	SG
1-1/2"	1-1/4"	1 1/4"	GT	TG
1-1/2"	1-1/4"	1"	GU	UG
1-1/2"	1"	1"	GV	VG
1-1/4"	1-1/4"	1 1/4"	GW	WG
1-1/4"	1-1/4"	1"	GX	XG
1-1/4"	1"	1"	GY	YG
1"	1"	1"	GZ	ZG

(Dual Outlet - Pump Only)

Outlets: for clockwise porting the top port number comes first; for counter-clockwise porting the bottom port number comes first.

IN •	OUT •		CW •	CCW •
Metric Split Flange				
2-1/2"	1-1/2"	1-1/2"	DB	BD
2-1/2"	1-1/2"	1-1/4"	DC	CD
2-1/2"	1-1/2"	1"	DE	ED
2-1/2"	1-1/4"	1-1/4"	DF	FD
2-1/2"	1-1/4"	1"	DG	GD
2-1/2"	1"	1"	DH	HD
2"	1-1/2"	1-1/2"	DJ	JD
2"	1-1/2"	1-1/4"	DK	KD
2"	1-1/2"	1"	DL	LD
2"	1-1/4"	1-1/4"	DM	MD
2"	1-1/4"	1"	DN	ND
2"	1"	1"	DP	PD
1-1/2"	1-1/2"	1-1/2"	DQ	QD
1-1/2"	1-1/2"	1-1/4"	DR	RD
1-1/2"	1-1/2"	1"	DS	SD
1-1/2"	1-1/4"	1-1/4"	DT	TD
1-1/2"	1-1/4"	1"	DU	UD
1-1/2"	1"	1"	DV	VD
1-1/4"	1-1/4"	1-1/4"	DW	WD
1-1/4"	1-1/4"	1"	DX	XD
1-1/4"	1"	1"	DY	YD
1"	1"	1"	DZ	ZD
BSPP Porting				
2"	1-1/2"	1-1/2"	JH	HJ
2"	1-1/2"	1-1/4"	JK	KJ
2"	1-1/2"	1"	JL	LJ
2"	1-1/4"	1-1/4"	JM	MJ
2"	1-1/4"	1"	JN	NJ
2"	1"	1"	JP	PJ
1 1/2"	1-1/2"	1-1/2"	JQ	QJ
1 1/2"	1-1/2"	1-1/4"	JR	RJ
1 1/2"	1-1/2"	1"	JS	SJ
1 1/2"	1-1/4"	1-1/4"	JT	TJ
1 1/2"	1-1/4"	1"	JU	UJ
1 1/2"	1"	1"	JV	VJ
1 1/4"	1-1/4"	1-1/4"	JW	WJ
1 1/4"	1-1/4"	1"	JX	XJ
1 1/4"	1"	1"	JY	YJ
1"	1"	1"	JZ	ZJ

(Single Outlet - Pump Only)

Outlet for front section.

IN •	OUT •	CW •	CCW •
Metric Split Flange			
2-1/2"	1-1/2"	CN	NC
2-1/2"	1-1/4"	CP	PC
2-1/2"	1"	CQ	QC
2"	1-1/2"	HR	RH
2"	1-1/4"	HS	SH
2"	1"	HT	TH
1-1/2"	1-1/2"	HU	UH
1-1/2"	1-1/4"	HV	VH
1-1/2"	1"	HW	WH
1-1/4"	- 1/4"	HX	XH
1-1/4"	1"	HY	YH
1"	1"	HZ	ZH
SAE Split Flange			
2-1/2"	1-1/2"	CJ	JC
2-1/2"	1-1/4"	CL	LC
2-1/2"	1"	CM	MC
2"	1-1/2"	HB	BH
2"	1-1/4"	HC	CH
SAE Split Flange (continued)			
2"	1"	HF	FH
1-1/2"	1-1/2"	HL	LH
1-1/2"	1-1/4"	HM	MH
1-1/2"	1"	HN	NH
1-1/4"	1-1/4"	HO	OH
1-1/4"	1"	HP	PH
1"	1"	HQ	QH
2-1/2"	1-1/2"	NR	RN
1-1/4"	1"	RS	SR
OD Tube Porting			
2"	1-1/2"	KB	BK
2"	1-1/4"	KC	CK
2"	1"	KF	FK
1-1/2"	1-1/2"	KL	LK
1-1/2"	1-1/4"	KM	MK
1-1/2"	1"	KN	NK
1-1/4"	1-1/4"	KO	OK
1-1/4"	1"	KP	PK
1"	1"	KQ	QK

(Combined Outlet)

Outlet for front section.

IN •	OUT •	CW •	CCW •
SAE Split Flange (pump)			
2-1/2"	1-1/2"	UC	CU
2-1/2"	1-1/4"	UF	FU
2"	1-1/2"	UN	NU
2"	1-1/4"	UO	OU
1-1/2"	1-1/2"	UP	PU
1-1/2"	1-1/4"	UQ	QU
1-1/4"	1-1/4"	UR	RU
SAE Split Flange (motor)			
2"	2"	**AA**-Double	
1-1/2"	1-1/2"	**BB**-Double	
1-1/4"	1-1/4"	**CC**-Double	
1"	1"	**EE**-Double	
3/4"	3/4"	**FF**-Double	
OD Tube Porting (pump)			
2"	1-1/2"	PE	EP
2"	1-1/4"	PM	MP
1-1/2"	1-1/2"	PN	NP
1-1/2"	1-1/4"	PQ	QP
1-1/4"	1-1/4"	PR	RP
OD Tube Porting (motor)			
1-1/2"	1-1/2"	**MM**-Double	
1-1/4"	1-1/4"	**NN**-Double	
1"	1"	**QQ**-Double	
3/4"	3/4"	**RR**-Double	
Metric Split Flange (motor)			
2"	2"	**GG**-Double	
1-1/2"	1-1/2"	**HH**-Double	
1-1/4"	1-1/4"	**JJ**-Double	
1"	1"	**KK**-Double	
3/4"	3/4"	**LL**-Double	
BSPP Porting (motor)			
1-1/2"	1-1/2"	**WW**-Double	
1-1/4"	1-1/4"	**XX**-Double	
1"	1"	**YY**-Double	
3/4"	3/4"	**ZZ**-Double	
Metric Straight Thread (motor)			
1-1/2"	1-1/2"	**SS**-Double	
1-1/4"	1-1/4"	**TT**-Double	
1"	1"	**UU**-Double	
3/4"	3/4"	**VV**-Double	
Common Inlet Passage			
No Ports		C	D

* Outlet port for rear section.

Connecting Shaft (10)

For connecting tandem units.
1 Connecting Shaft

T+P
TRIDENT PRECISION INTERNATIONAL
151,SECTOR -06, IMT MANESAR,
GURGAON,HARYANA,122050
0124-4101151
WWW.TRIDENT PRECISION.IN
sales@tridentprecision.in

General Information

PGP/PGM300 Series Pumps & Motors

- Three-piece cast iron construction
- Low friction bushing design
- Heavy-duty application
- Single, multiple, piggyback and thru-drive assemblies

The PGP/PGM300 Series pumps and motors set the standard for superior performance and reliability in heavy-duty hydraulic application. The three-piece cast iron construction with large area, low-friction bushings provide strength, high efficiency, and long life in severe operating environments. The design includes an advanced thrust plate and seal configuration, which optimizes performance even in high temperature and low viscosity conditions.

The PGP300 Series pumps are available in single, multiple, piggyback, and thru-drive assemblies. Multiple pumps reduce mounting costs, allow for a small package size and common inlet capabilities. Assemblies up to six pumping sections are available. Piggyback pumps allow the combination of pump sections of different frame size to use a common inlet in tandem configuration. The thru-drive feature allows an independent piston or gear pump to be mounted to a rear SAE drive pad. Multiple section motors are also available providing enhanced torque and speed control as well as smooth torque ripple.

Relief valve, priority valve, load-sense unloading, and other integrated or bolt-on valve options are also available.

Model P = Pump M = Motor Options D = Stealth	Gear Width	Theoretical Displacement in³/r	cm³/r	Mineral Oil Maximum Pressure Continuous psi	bar	Intermittent psi	bar
PGP315 PGM315		.620	10.2	3500	245	4000	275
		.775	12.7	3500	245	4000	275
		.930	15.2	3500	245	4000	275
		1.09	17.8	3500	245	4000	275
		1.24	20.3	3500	245	4000	275
		1.40	22.9	3500	245	4000	275
		1.55	25.9	3500	245	3850	265
		1.71	27.9	3500	245	3700	255
		1.86	30.5	3300	225	3500	245
		2.02	33.0	3100	215	3350	230
		2.17	35.6	2900	200	3100	215
		2.33	38.1	2700	190	2950	205
		2.48	40.6	2500	175	2750	190
PGP330 PGM330	0.5	.985	16.1	3500	245	4000	275
	0.75	1.47	24.2	3500	245	4000	275
	1.0	1.97	32.3	3500	245	4000	275
	1.25	2.46	40.4	3500	245	4000	275
	1.5	2.95	48.4	3500	245	3850	265
	1.75	3.44	56.5	3250	225	3500	245
	2.0	3.94	64.6	3000	210	3300	225
PGP350 PGM350		1.28	20.9	3500	245	4000	275
		1.91	31.3	3500	245	4000	275
		2.55	41.8	3500	245	4000	275
		3.19	52.2	3500	245	4000	275
		3.82	62.7	3500	245	3850	265
		4.46	73.1	3250	225	3500	245
		5.10	83.6	3000	210	3300	225
		5.73	94.0	2750	190	3000	210
	2.5	6.38	104.5	2500	175	2750	190
PGP365 PGM365	0.75	2.70	44.3	3500	245	4000	275
	1.0	3.60	59.0	3500	245	4000	275
	1.25	4.50	73.8	3500	245	4000	275
	1.5	5.40	88.5	3500	245	4000	275
	1.75	6.30	103.3	3500	245	4000	275
	2.0	7.20	118.0	3500	245	3850	265
	2.25	8.10	132.8	3250	225	3500	245
	2.5	9.00	147.5	3000	210	3300	225

T+P
TRIDENT PRECISION INTERNATIONAL
151,SECTOR -06, IMT MANESAR,
GURGAON,HARYANA,122050
0124-4101151
WWW.TRIDENT PRECISION.IN
sales@tridentprecision.in

PL Factor

Each section of a multiple pump or motor should be regarded as a single unit with corresponding delivery and power input requirements. Since the entire input horsepower is fed through a common drive shaft, the power delivered to or from the unit is limited by the physical strength of the shaft. This limit is defined as a "PL" factor; "P" being the operating pressure and "L" the summation of gear widths.

In multiple units the "PL" must be calculated for the first connecting shaft as well as the drive shaft. Each style or type of shaft has a unique "PL" factor as noted in the table to the right.

Pressure X Total Gear Width = PL

PL MUST NOT EXCEED NUMBER SHOWN IN CHART FOR APPROPRIATE SHAFT.

PL Chart

Shaft Style	Integral Shaft & Gear	Two-Piece Style
PGP/PGM315		
SAE "A" Spline *(up to 1.25" GW)*	4,450	--
SAE "A" Key	3,600	--
SAE "B" Spline	13,400	--
SAE "B" Key	9,900	--
Connecting Shaft	--	5,550
PGP/PGM330		
SAE "B" Spline	8,450	6,250
SAE "B" Key	6,250	6,250
SAE "B-B" Spline	13,000	6,250
SAE "B-B" Key	9,300	6,250
SAE "C" Spline	--	6,250
SAE "C" Key	--	6,250
Connecting Shaft	--	6,250
PGP/PGM350		
SAE "B" Spline	6,450	6,450
SAE "B" Key	4,750	4,750
SAE "B-B" Spline	9,900	9,000
SAE "B-B" Key	7,100	7,100
SAE "C" Spline	19,100	9,000
SAE "C" Key	13,900	9,000
Connecting Shaft	--	9,000
PGP/PGM365		
SAE "B" Spline	5,050	5,050
SAE "B" Key	3,700	3,700
SAE "B-B" Spline	7,750	5,350
SAE "B-B" Key	5,550	5,550
SAE "C" Spline	14,900	11,950
SAE "C" Key	10,800	10,800
Connecting Shaft	--	11,950

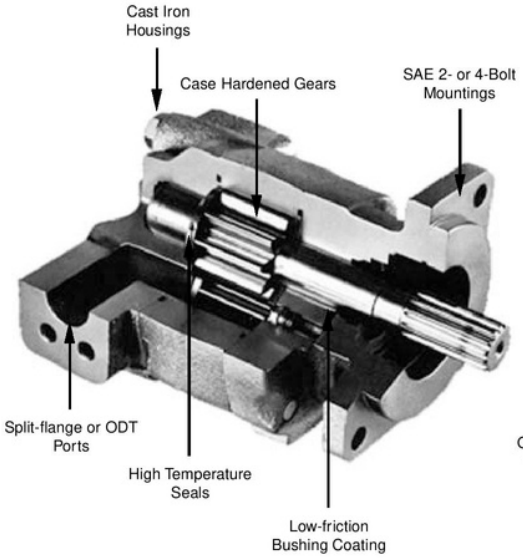

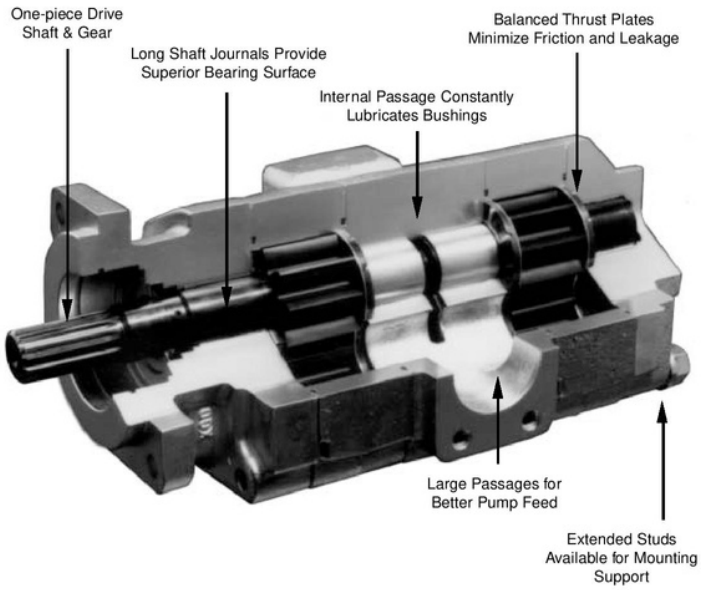

T+P
TRIDENT PRECISION INTERNATIONAL
151,SECTOR -06, IMT MANESAR,
GURGAON,HARYANA,122050
0124-4101151
WWW.TRIDENT PRECISION.IN
sales@tridentprecision.in

General Data

Pump Type
Heavy duty, cast iron, external gear pump

Mounting
SAE standard flanges, ZF, others

Porting
SAE split flanges and other types of threaded ports (see table page 7)

Shaft Style
SAE splined, keyed, and others (see table page 7)

Drive
Clockwise, counterclockwise, double. Direct drive with flexible coupling is recommended. Pumps subject to radial loads must be specified with an outboard bearing. Axial loading is not allowed.

Speed
From 400 to 3000 rpm.

Theoretical Displacements
(See table page 4)

Maximum radial loads with outboard bearing

PGP/PGM315 (only SEC - 90)	720 lb.
PGP/PGM330	785 lb.
PGP/PGM350	1125 lb.
PGP/PGM365	1460 lb.

Pump Inlet Pressure
30 psia (15psig) maximum pressure/5 in. Hg maximum vacuum at operating temperature

Outlet Pressure
(See table page 4)

Hydraulic Fluids
Mineral oil, fire resistant fluids:
- water-oil emulsions 60/40, HFB
- water-glycol, HFC
- phosphate-esters, HFD (FPM seals required)

Fluid temperature
Mineral oil with standard seals:
0° to 180° F (-20° C to +80° C)
Fire resistant fluids HFB, HFC
0° to 150° F (-20° C to +65° C)

Fluid velocity
From 7.5 to 1600 cSt (50 to 7500 sus)
Recommended 15 to 75 cSt

Filtration
ISO 4406 code:
- 19/16 at 2000 psi/ 140 bar
- 17/14 at 3000 psi/ 210 bar
- 15/12 at 4000 psi/ 275 bar

Flow Viscosity
Mineral oil and HFD:
- Inlet up to 8 fps/ 2.5 m/s
- Outlet up to 18 fps/ 6,0 m/s

Fire resistant fluids HFB, HFC
- Inlet up to 5 fps/ 1.5 m/s
- Outlet up to 13 fps/ 4.0 m/s

Multiple Pump Assemblies
Up to 6 gear sections of the same model, even with different gear widths

Piggyback Assemblies
Several models can be mounted together, one at the rear of the other. Fluids will intermix even with separate reservoirs: PGP/PGM330/315, PGP/PGM350/315, PGP/PGM365/330, PGP/PGM365/330/315

Add-a-pump assemblies
Similar to piggyback, but fluids are not intermixed.
PGP330/Al (Al: aluminum pumps)
PGP350/Al, PGP350/315, PGP350/330, PGP350/350, PGP365/Al, PGP365/315, PGP365/330, PGP365/350

Pumps With Priority Outlet Load Sensing Availability
Available for models PGP315, PGP330, PGP350
- For operation outside given parameters, please consult the representative in your area.
- The smallest gear width of each model is not recommended for single units at the maximum rated pressure
- Theoretical displacement is equal to the theoretical flow at 1000 rpm.

T+P
TRIDENT PRECISION INTERNATIONAL
151,SECTOR -06, IMT MANESAR,
GURGAON,HARYANA,122050
0124-4101151
WWW.TRIDENT PRECISION.IN
sales@tridentprecision.in

Porting

SAE Flanged Ports Metric Thread (SSM)

Port Size inch	Port Size mm	A mm	B mm	C mm	D mm
0.50	12.7	17.5	38.1	M 8x1.25	23.9
0.75	19.1	22.2	47.6	M 10x1.50	22.4
1.00	25.4	26.2	52.2	M 10x1.50	22.4
1.25	31.8	30.2	58.7	M 10x1.50	28.4
1.50	36.1	35.7	69.9	M 12x1.75	26.9
2.00	50.8	42.9	77.8	M 12x1.75	26.9
2.50	63.5	50.8	88.9	M 12x1.75	30.2

SAE Flanged Ports UNC Thread (SSS)

Port Size inch	Port Size mm	A mm	B mm	C mm	D mm
0.50	12.7	17.5	38.1	5/16"-18	23.9
0.75	19.1	22.2	47.6	3/8"-16	22.4
1.00	25.4	26.2	52.2	3/8"-16	22.4
1.25	31.8	30.2	58.7	7/16"-14	28.4
1.50	36.1	35.7	69.9	1/2"-13	26.9
2.00	50.8	42.9	77.8	1/2"-13	26.9
2.50	63.5	50.8	88.9	1/2"-13	30.2

British Standard Pipe Parallel (BSPP)

BSPP	A mm	B mm	C mm	D mm
0.50"-14	19.00	34.0	2.5	14.0
0.75"-14	24.50	40.0	2.5	16.0
1.00"-11	30.75	50.0	2.5	18.0
1.25"-11	39.50	58.0	2.5	20.0
1.50"-11	45.25	64.0	2.5	22.0
2.00"-11	56.25	78.0	3.0	24.0

SAE Straight Thread (ODT)

ODT	A UNF	B mm	C mm	D mm	E mm
1/2"	3/4"-16	14.3	30.2	2.4	2.55
5/8"	7/8"-14	16.7	34.1	2.4	2.55
3/4"	1-1/16"-12	19.1	41.3	2.4	3.30
7/8"	1-3/16"-12	19.1	44.8	2.4	3.30
1"	1-5/16"-12	19.1	48.5	2.4	3.30
1-1/4"	1-5/8"-12	19.1	57.7	2.4	3.35
1-1/2"	1-7/8"-12	19.1	65.0	2.4	3.35
2"	2-1/2"-12	19.1	88.4	2.4	3.35

SAE Flange

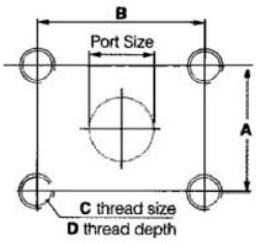

Drive Shaft
Maximum Input Torque

Shaft Style		• integral: 1 • 2 pieces: 2	315 lb-ft Nm	330 lb-ft Nm	350 lb-ft Nm	365 lb-ft Nm
SAE A	splined - 9 teeth	1	80 109	-	-	-
		2	-	-	-	-
	5/8" keyed	1	62 84	-	-	-
		2	-	-	-	-
SAE B	splined - 13 teeth	1	242 328	242 328	242 328	242 328
		2	-	159 215	242 328	242 328
	7/8" keyed	1	167 226	167 226	167 226	167 226
		2	-	159 215	167 226	167 226
SAE BB	splined - 15 teeth	1	-	371 503	371 503	371 503
		2	-	159 215	300 407	371 503
	1" keyed	1	-	250 339	250 339	250 339
		2	-	159 215	250 339	250 339
SAE C	splined - 14 teeth	1	-	-	708 960	708 960
		2	-	159 215	300 407	533 723
	1.25" keyed	1	-	-	500 678	500 678
		2	-	159 215	300 407	500 678
			-	-		-
DIN 5462 B8 x 32 x 36		2	-	159 215	300 407	-
DIN 254 taper 1:5		1	55 74	-		-
Connecting Shaft			90 122	159 215	300 407	533 723

British Standards

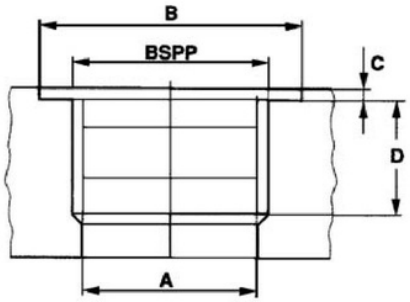

SAE Straight

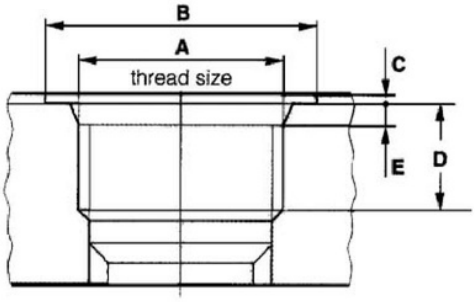

T+P
TRIDENT PRECISION INTERNATIONAL
151,SECTOR -06, IMT MANESAR,
GURGAON,HARYANA,122050
0124-4101151
WWW.TRIDENT PRECISION.IN
sales@tridentprecision.in

PGP/PGM315, PGP/PGM330, PGP/PGM350, PGP/PGM365 Performance Curves

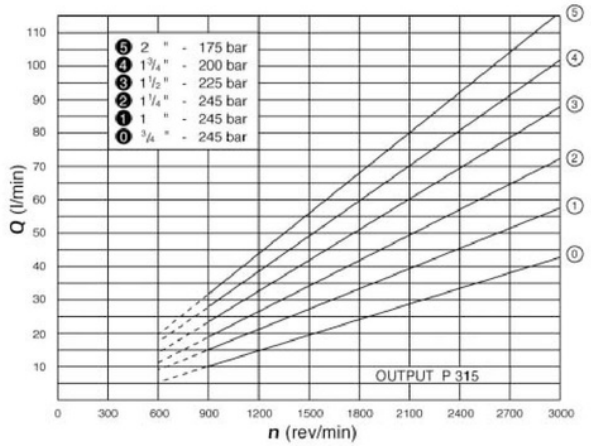

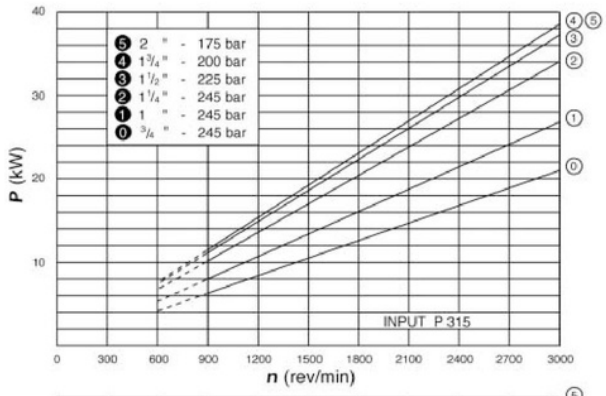

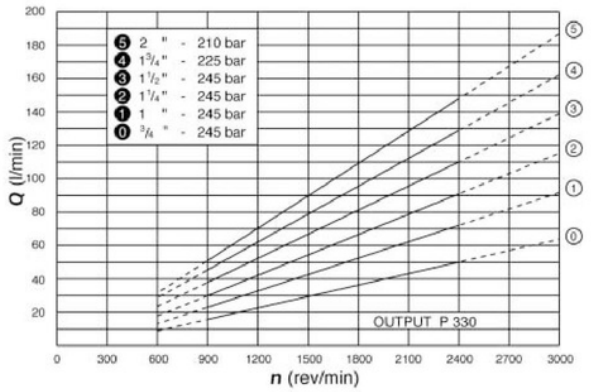

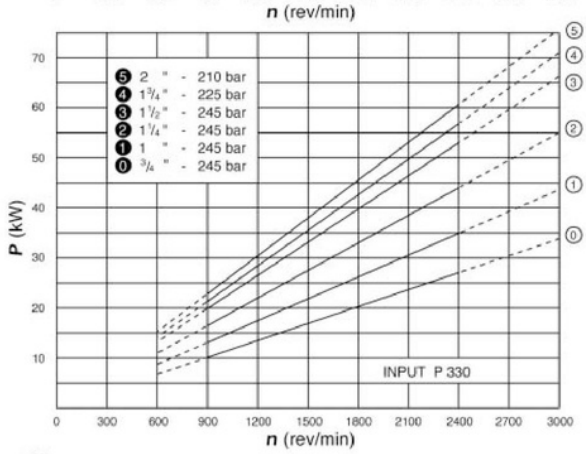

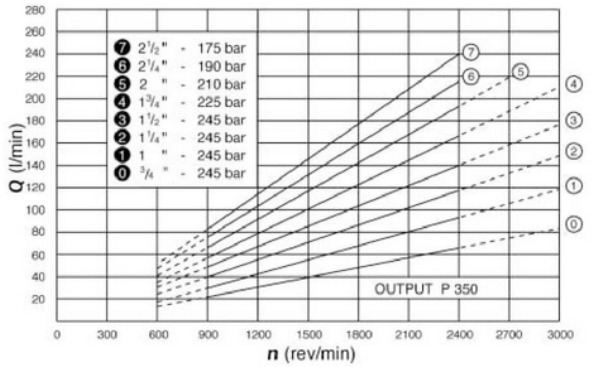

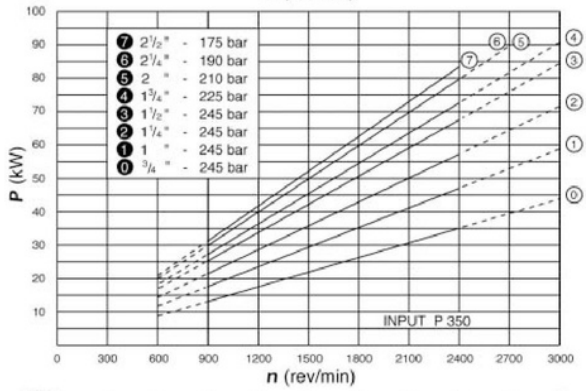

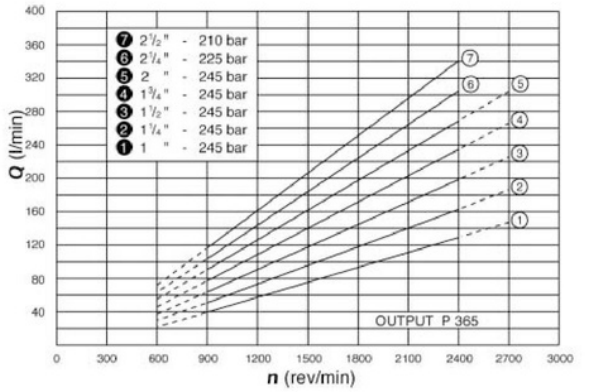

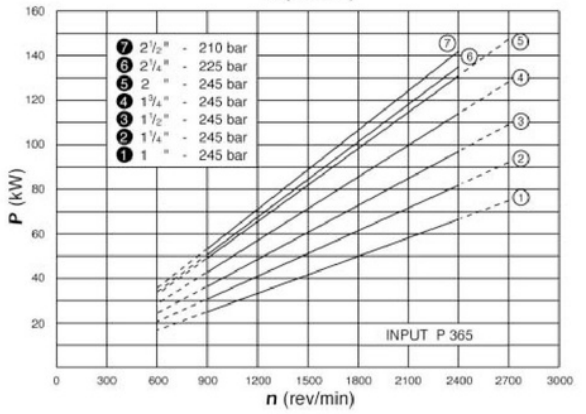

TRIDENT PRECISION INTERNATIONAL
151,SECTOR -06, IMT MANESAR,
GURGAON,HARYANA,122050
0124-4101151 WWW.TRIDENT PRECISION.IN sales@tridentprecision.in

Dimensional Data

Single Pumps & Motors

Model	Dimensions Inches/mm									
	A	B	C**	D*	E	F	G	H	J(P)	J(M)
PGP/PGM315	4.27+GW	4.75	4.25	1.62	1.88	2.00	.75	3.27+GW	4.0	4.19
	108.5+GW	120.7	108.0	41.1	47.8	50.8	19.1	83.1+GW	101.6	106.4
PGP/PGM330	6.19+GW	5.88	6.88	1.62	3.12	2.56	.88	4.94+GW	4.81	5.00
	157.2+GW	149.4	174.8	41.1	79.2	65.0	22.2	125.5+GW	122.2	127.0
PGP/PGM350	7.06+GW	6.00	7.12	2.19	3.50	3.06	1.00	5.56+GW	5.75	5.75
	179.3+GW	152.4	108.8	55.6	88.9	77.7	25.4	141.2+GW	146.1	146.1
PGP/PGM365	7.31+GW	7.25	7.38	2.19	3.75	3.06	1.12	5.81+GW	6.25	6.25
	185.7+GW	184.2	187.5	55.6	95.3	77.7	28.6	147.6+GW	158.8	158.8

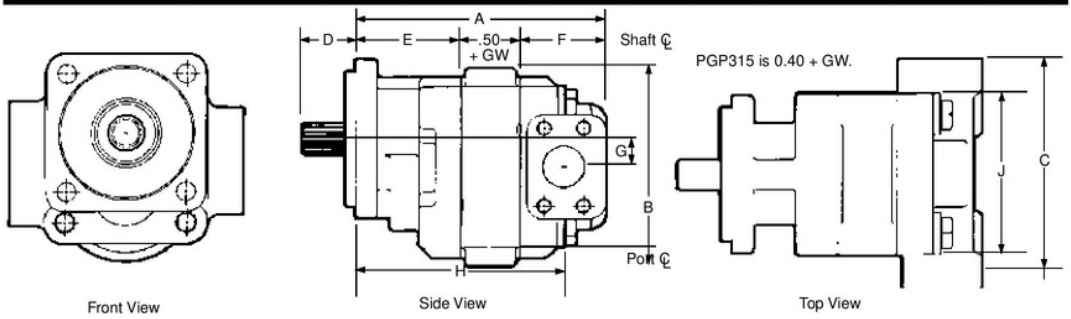

Tandem Pumps & Motors

Model	Dimensions Inches/mm														
	A	B	C**	D*	E	F	G	H	I	J	K	L**	M**	N(P)	N(M)
PGP/PGM 315	7.05+T.GW	4.75	5.00	1.62	1.88	1.75	2.62	1.84	.34	.75	3.59+GW	2.25	2.75	4.0	4.19
	179.1+T.GW	120.7	127.0	41.1	47.8	44.5	66.5	46.7	8.6	19.1	91.2+GW	57.2	69.9	101.6	106.4
PGP/PGM 330	9.88+T.GW	5.88	6.78	1.62	3.12	2.25	3.50	2.38	.62	.88	5.38+GW	3.09	3.69	4.81	5.00
	250.9+T.GW	149.4	172.2	41.1	79.2	57.2	88.9	60.5	15.7	22.2	136.7+GW	78.5	93.7	122.2	127.0
PGP/PGM 350	10.25+T.GW	6.00	7.69	2.19	3.50	2.25	3.50	2.50	.50	1.00	5.75+GW	3.56	4.12	5.75	5.75
	260.4+T.GW	152.4	195.3	55.6	88.9	57.2	88.9	63.5	12.7	25.4	146.1+GW	90.4	104.6	146.1	146.1
PGP/PGM 365	11.38+T.GW	7.25	8.38	2.19	3.75	2.62	4.00	2.88	.62	1.12	6.25+GW	3.69	4.69	6.25	6.25
	289.1+T.GW	184.2	212.9	55.6	95.3	66.5	101.6	73.3	15.7	28.6	158.8+GW	93.7	119.1	158.8	158.8

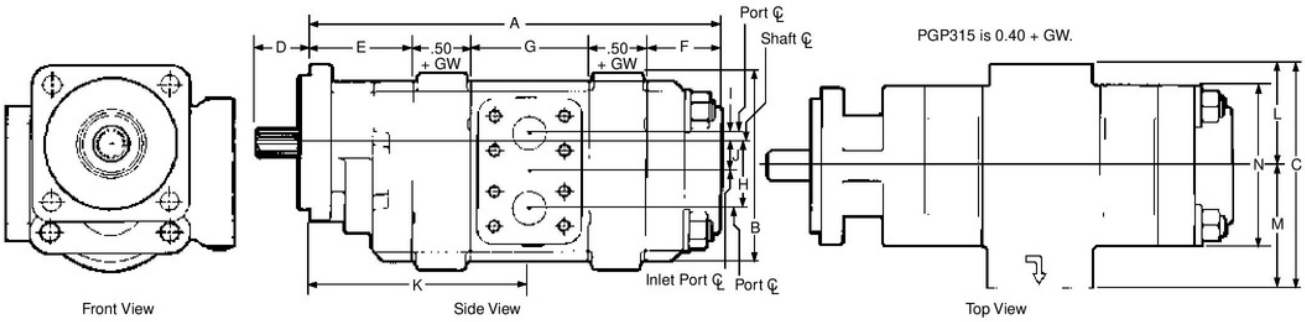

* This dimension will vary with type of drive shaft. ** This dimension will vary with type of ports. T=Total.

Weights

The following are the approximate weights of a single 1" gear section in each frame size:

PGP/PGM315 ... 18 lbs. PGP/PGM330 .....36 lbs.
PGP/PGM350 ... 51 lbs. PGP/PGM365 ..... 56 lbs.

For each additional 1/4" of gear width add:

PGP/PGM315 ..... 1 lb. PGP/PGM330 ... 1- 1/4 lbs.
PGP/PGM350 ... 1-1/2 lbs. PGP/PGM365 ..... 2-1/2 lbs.

To find the approximate weight of a multiple section assembly, add the weight of each section as a single. For the PGP/PGM330 frame size subtract 10% from this figure.

T+P
TRIDENT PRECISION INTERNATIONAL
151,SECTOR -06, IMT MANESAR,
GURGAON,HARYANA,122050
0124-4101151
WWW.TRIDENT PRECISION.IN
sales@tridentprecision.in

PGP315 Pump Performance Data

speed rpm	output flow / input power	Gear Widths 1/2"	3/4"	1"	1-1/4"	1-1/2"	1-3/4"	2"
900	GPM	2.0	3.2	4.4	5.5	6.7	7.9	9.0
	LPM	8	12	17	21	26	30	34
	HP	5	8	11	13	15	15	15
	kW	4	6	8	10	11	11	11
1200	GPM	2.8	4.4	6.0	7.6	9.2	10.7	12.2
	LPM	11	17	23	29	35	40	46
	HP	7	11	14	18	20	21	20
	kW	5	8	11	13	15	15	15
1500	GPM	3.6	5.6	7.7	9.6	11.6	13.5	15.4
	LPM	14	21	29	36	44	51	58
	HP	9	13	18	22	25	26	25
	kW	7	10	13	16	19	19	19
1800	GPM	4.4	6.8	9.3	11.6	14.0	16.3	18.6
	LPM	17	26	35	44	53	62	70
	HP	11	16	21	27	30	31	30
	kW	8	12	16	20	22	23	23
2100	GPM	5.2	8.1	10.9	13.6	16.4	19.1	21.8
	LPM	20	30	41	51	62	72	83
	HP	12	19	25	31	35	36	35
	kW	9	14	18	23	26	27	26
2400	GPM	6.0	9.3	12.5	15.6	18.8	21.9	25.1
	LPM	23	35	47	59	71	83	95
	HP	14	21	28	35	40	41	40
	kW	11	16	21	26	30	31	30
3000	GPM	7.7	11.7	15.7	19.6	23.7	27.6	31.5
	LPM	29	44	59	74	90	104	119
	HP	18	27	35	44	50	51	51
	kW	13	20	26	33	37	38	38

Performance data shown are the average results based on a series of laboratory tests of production units and are not necessarily representative of any one unit. Tests were run with the oil reservoir temperature at 120°F and viscosity 150 SUS at 100°F.

Note: Pump output flow is at the maximum rated pressure (see page 15).

PGM315 Motor Performance Data

Speed RPM	Output Torque	Gear Widths 1" 3500 psi A	B	1-1/4" 3500 psi A	B	1-1/2" 3300 psi A	B	1-3/4" 2900 psi A	B	2" 2500 psi A	B
900	in/lbs	7.1	665	8.3	830	9.6	940	10.9	965	12.2	950
	Nm	27	75.1	32	93.8	37	106.2	41	109.0	46	107.3
1200	in/lbs	8.8	665	10.5	830	12.2	940	13.8	965	15.5	950
	Nm	33	75.1	40	93.8	46	106.2	52	109.0	59	107.3
1500	in/lbs	10.6	660	12.6	825	14.7	935	16.7	955	18.8	945
	Nm	40	74.6	48	93.2	56	105.6	63	107.9	71	106.8
1800	in/lbs	12.3	655	14.7	820	17.2	930	19.6	950	22.1	940
	Nm	46	74.0	56	92.6	65	105.1	74	107.3	84	106.2
2100	in/lbs	14.0	655	16.8	820	19.7	930	22.5	950	25.4	940
	Nm	53	74.0	64	92.6	75	105.1	85	107.3	96	106.2
2400	in/lbs	15.7	640	18.9	800	22.2	910	25.4	930	28.8	920
	Nm	59	72.3	72	90.4	84	102.8	96	105.1	109	103.9
3000	in/lbs	19.0	640	23.0	800	27.2	905	31.2	925	35.3	915
	Nm	72	72.3	87	90.4	103	102.3	118	104.5	134	103.4

A: Input Flow GPM/LPM; B: Output Torque IN/LBS/Nm

Note: In accordance with our policy of continuing product development, we reserve the right to change specifications shown in this catalog without notice.

T+P
TRIDENT PRECISION INTERNATIONAL
151,SECTOR -06, IMT MANESAR,
GURGAON,HARYANA,122050
0124-4101151
WWW.TRIDENT PRECISION.IN
sales@tridentprecision.in

PGP330 Pump Performance Data

speed rpm	output flow / input power	Gear Widths 1/2"	3/4"	1"	1-1/4"	1-1/2"	1-3/4"	2"
900	GPM	3.2	5.1	7.0	8.8	10.6	12.4	14.3
	LPM	12	19	26	33	40	47	54
	HP	9	13	17	21	26	28	29
	kW	6	10	13	16	19	21	22
1200	GPM	4.5	7.0	9.5	12.0	14.5	16.9	19.4
	LPM	17	26	36	45	55	64	73
	HP	11	17	23	28	34	37	39
	kW	8	13	17	21	25	28	29
1500	GPM	5.8	8.9	12.1	15.2	18.3	21.4	24.5
	LPM	22	34	46	57	69	81	93
	HP	14	21	28	35	43	46	49
	kW	11	16	21	26	32	34	36
1800	GPM	7.1	10.8	14.7	18.4	22.1	25.9	29.6
	LPM	27	41	55	70	84	98	112
	HP	17	26	34	43	51	55	58
	kW	13	19	25	32	38	41	44
2100	GPM	8.4	12.7	17.2	21.6	26.0	30.3	34.7
	LPM	32	48	65	82	98	115	131
	HP	20	30	40	50	60	65	68
	kW	15	22	30	37	44	48	51
2400	GPM	9.6	14.7	19.8	24.8	29.8	34.8	39.8
	LPM	36	55	75	94	113	132	151
	HP	23	34	45	57	68	74	78
	kW	17	25	34	42	51	55	58
3000	GPM	12.2	18.5	24.9	31.2	37.5	43.8	50.1
	LPM	46	70	94	118	142	166	190
	HP	28	43	57	71	85	92	97
	kW	21	32	42	53	64	69	73

Performance data shown are the average results based on a series of laboratory tests of production units and are not necessarily representative of any one unit. Tests were run with the oil reservoir temperature at 120°F and viscosity 150 SUS at 100°F.

Note: Pump output flow is at the maximum rated pressure (see page 16).

PGM330 Motor Performance Data

Speed RPM	Output Torque	Gear Widths 1" 3500 psi A	B	1-1/4" 3500 psi A	B	1-1/2" 3500 psi A	B	1-3/4" 3250 psi A	B	2" 3000 psi A	B
900	in/lbs	10.1	1010	12.3	1270	14.5	1530	16.7	1665	19.0	1770
	Nm	38	114.1	47	143.5	55	172.9	63	188.1	72	200.0
1200	in/lbs	12.8	1005	15.7	1265	18.6	1525	21.4	1660	24.3	1760
	Nm	49	113.6	59	142.9	70	172.3	81	187.6	92	198.9
1500	in/lbs	15.6	1000	19.1	1255	22.6	1515	26.1	1650	29.6	1750
	Nm	59	113.0	72	141.8	85	171.2	99	186.4	112	197.7
1800	in/lbs	18.4	995	22.5	1250	26.6	1505	30.8	1640	34.9	1740
	Nm	69	112.4	85	141.2	101	170.0	116	185.3	132	196.6
2100	in/lbs	21.1	990	25.9	1240	30.7	1495	35.4	1625	40.2	1720
	Nm	80	111.9	98	140.1	116	168.9	134	183.6	152	194.3
2400	in/lbs	23.9	985	29.3	1235	34.7	1480	40.1	1605	45.5	1695
	Nm	90	111.3	111	139.5	131	167.2	152	181.3	172	191.5
3000	in/lbs	29.2	980	35.9	1230	42.6	1475	49.3	1595	56.0	1685
	Nm	110	110.7	136	139.0	161	166.7	186	180.2	212	190.4

A: Input Flow GPM/LPM; B: Output Torque IN-LBS/Nm

Note: In accordance with our policy of continuing product development, we reserve the right to change specifications shown in this catalog without notice.

T+P
TRIDENT PRECISION INTERNATIONAL
151,SECTOR -06, IMT MANESAR,
GURGAON,HARYANA,122050
0124-4101151
WWW.TRIDENT PRECISION.IN
sales@tridentprecision.in

PGP350 Pump Performance Data

speed rpm	output flow / input power	Gear Widths 1/2"	3/4"	1"	1-1/4"	1-1/2"	1-3/4"	2"	2-1/4"	2-1/2"
900	GPM	4.0	6.4	8.8	11.2	13.7	16.1	18.6	21.0	23.4
	LPM	15	24	33	42	52	61	70	79	89
	HP	11	17	22	28	33	36	38	39	40
	kW	8	12	17	21	25	27	28	29	30
1200	GPM	5.6	8.8	12.1	15.4	18.7	21.9	25.2	28.4	31.7
	LPM	21	33	46	58	71	83	95	108	120
	HP	15	22	30	37	44	48	51	52	53
	kW	11	17	22	28	33	36	38	39	39
1500	GPM	7.3	11.3	15.5	19.5	23.6	27.7	31.8	35.9	40.0
	LPM	28	43	59	74	89	105	120	136	151
	HP	18	28	37	46	55	60	63	65	66
	kW	14	21	28	34	41	45	47	49	49
1800	GPM	8.9	13.8	18.8	23.6	28.6	33.5	38.4	43.3	48.3
	LPM	34	52	71	89	108	127	145	164	183
	HP	22	33	44	55	67	72	76	78	79
	kW	17	25	33	41	50	54	57	58	59
2100	GPM	10.6	16.3	22.1	27.8	33.6	39.3	45.1	50.8	56.6
	LPM	40	62	84	105	127	149	171	192	214
	HP	26	39	52	65	78	84	89	91	92
	kW	19	29	39	48	58	63	66	68	69
2400	GPM	12.2	18.8	25.4	31.9	38.5	45.1	51.7	58.2	64.8
	LPM	46	71	96	121	146	171	196	220	245
	HP	30	44	59	74	89	96	101	105	106
	kW	22	33	44	55	66	72	76	78	79

Performance data shown are the average results based on a series of laboratory tests of production units and are not necessarily representative of any one unit. Tests were run with the oil reservoir temperature at 120°F and viscosity 150 SUS at 100°F.

Note: Pump output flow is at the maximum rated pressure (see page 18).

PGM350 Motor Performance Data

Speed RPM	Input Torque	Gear Widths 1" 3500 psi A	B	1-1/4" 3500 psi A	B	1-1/2" 3500 psi A	B	1-3/4" 3250 psi A	B	2" 3000 psi A	B	2-1/4" 2750 psi A	B	2-1/2" 2500 psi A	B
900	in/lbs	13.4	1320	16.0	1670	18.6	2025	21.2	2225	23.8	2350	26.4	2425	28.9	2450
	Nm	51	149.1	61	188.7	70	228.8	80	251.4	90	265.5	100	274.0	110	276.8
1200	in/lbs	16.9	1315	20.4	1660	23.8	2015	27.2	2215	30.6	2340	34.0	2410	37.4	2435
	Nm	64	148.6	77	187.6	90	227.7	103	250.3	116	264.4	129	272.3	142	275.1
1500	in/lbs	20.5	1300	24.7	1640	28.9	1990	33.2	2195	37.4	2315	41.7	2385	45.9	2410
	Nm	77	146.9	93	185.3	110	224.8	126	248.0	142	261.6	158	269.5	174	272.3
1800	in/lbs	24.0	1295	29.0	1635	34.1	1980	39.2	2180	44.2	2300	49.3	2375	54.4	2395
	Nm	91	146.3	110	184.7	129	223.7	148	246.3	167	259.9	187	268.3	206	270.6
2100	in/lbs	27.5	1285	33.4	1620	39.3	1965	45.2	2165	51.1	2285	57.0	2355	62.9	2380
	Nm	104	145.2	126	183.0	149	222.0	171	244.6	193	258.2	216	266.1	238	268.9
2400	in/lbs	31.0	1265	37.7	1600	44.4	1940	51.2	2135	57.9	2255	64.6	2325	71.3	2350
	Nm	117	142.9	143	180.8	168	219.2	194	241.2	219	254.8	245	262.7	270	265.5

A: Input Flow GPM/LPM; B: Output Torque IN/LBS/Nm

Note: In accordance with our policy of continuing product development, we reserve the right to change specifications shown in this catalog without notice.

T+P
TRIDENT PRECISION INTERNATIONAL
151,SECTOR -06, IMT MANESAR,
GURGAON,HARYANA,122050
0124-4101151
WWW.TRIDENT PRECISION.IN
sales@tridentprecision.in

PGP365 Pump Performance Data

speed rpm	output / input	Gear Widths 3/4"	1"	1-1/4"	1-1/2"	1-3/4"	2"	2-1/4"	2-1/2"
900	GPM	8.0	11.5	14.9	18.4	21.8	25.4	28.8	32.3
	LPM	30	44	57	70	83	96	109	122
	HP	24	31	39	47	55	63	66	67
	kW	18	23	29	35	41	47	49	50
1200	GPM	11.5	16.2	20.8	25.5	30.0	34.7	39.3	44.0
	LPM	44	61	79	96	114	131	149	166
	HP	31	42	52	63	73	84	88	90
	kW	23	31	39	47	55	63	65	67
1500	GPM	15.0	20.9	26.6	32.5	38.2	44.1	49.8	55.6
	LPM	57	79	101	123	145	167	188	211
	HP	39	52	66	79	92	105	110	112
	kW	29	39	49	59	68	78	82	84
1800	GPM	18.5	25.6	32.5	39.5	46.4	53.4	60.3	67.3
	LPM	70	97	123	149	176	202	228	255
	HP	47	63	79	94	110	126	131	135
	kW	35	47	59	70	82	94	98	101
2100	GPM	22.0	30.2	38.3	46.5	54.6	62.8	70.8	79.0
	LPM	83	114	145	176	207	238	268	299
	HP	55	73	92	110	128	147	153	157
	kW	41	55	68	82	96	110	114	117
2400	GPM	25.6	34.9	44.2	53.5	62.8	72.1	81.4	90.7
	LPM	97	132	167	203	238	273	308	343
	HP	63	84	105	126	147	168	175	180
	kW	47	63	78	94	110	125	131	134

Performance data shown are the average results based on a series of laboratory tests of production units and are not necessarily representative of any one unit. Tests were run with the oil reservoir temperature at 120°F and viscosity 150 SUS at 100°F.

Note: Pump output flow is at the maximum rated pressure (see page 20).

PGM365 Motor Performance Data

Speed RPM	Input Torque	Gear Widths 1" 3500 psi A	B	1-1/4" 3500 psi A	B	1-1/2" 3500 psi A	B	1-3/4" 3500 psi A	B	2" 3500 psi A	B	2-1/4" 3250 psi A	B	2-1/2" 3000 psi A	B
900	in/lbs	18.4	1865	22.0	2355	25.6	2860	29.2	3370	32.9	3850	36.5	4020	40.1	4125
	Nm	70	210.7	83	266.1	97	323.1	111	380.8	124	435.0	138	454.2	152	466.1
1200	in/lbs	23.3	1845	28.1	2330	32.9	2830	37.6	3335	42.4	3810	47.2	3980	52.0	4080
	Nm	88	208.5	106	263.3	124	319.7	142	376.8	160	430.5	179	449.7	197	461.0
1500	in/lbs	28.2	1815	34.1	2295	40.1	2780	46.0	3280	52.0	3750	57.9	3915	63.8	4020
	Nm	107	205.1	129	259.3	152	314.1	174	370.6	197	423.7	219	442.3	242	454.2
1800	in/lbs	33.1	1805	40.2	2280	47.3	2765	54.4	3265	61.5	3730	68.6	3895	75.7	3995
	Nm	125	203.9	152	257.6	179	312.4	206	368.9	233	421.4	260	440.1	287	451.4
2100	in/lbs	37.9	1755	46.2	2220	54.4	2690	62.8	3160	71.1	3610	79.3	3770	87.6	3865
	Nm	144	198.3	175	250.8	206	303.9	238	357.0	269	407.9	300	426.0	332	436.7
2400	in/lbs	42.8	1705	52.3	2155	61.7	2615	71.2	3055	80.6	3490	90.1	3645	99.5	3740
	Nm	162	192.6	198	243.5	234	295.5	269	345.2	305	394.3	341	411.8	377	422.6

A: Input Flow GPM/LPM; B: Output Torque IN/LBS/Nm

Note: In accordance with our policy of continuing product development, we reserve the right to change specifications shown in this catalog without notice.

T+P
TRIDENT PRECISION INTERNATIONAL
151,SECTOR -06, IMT MANESAR,
GURGAON,HARYANA,122050
0124-4101151
WWW.TRIDENT PRECISION.IN
sales@tridentprecision.in

PGP400 Series Pumps

The PGP400 series of high pressure, fixed displacement gear pumps are available in single and multiple assemblies. These units are rated for service up to 4500 psi. They're available in three models offering you a displacement range from 1.5 to 5.5 CIR.

These units are cast from high-strength iron which provides the structural integrity needed at high pressures. Gear widths have been selected to keep shaft deflections and bearing loads within acceptable design limits. Body seals have been strengthened and the fastener pre-load increased to assure reliability under high pressure conditions.

A wide variety of SAE B and C mounting flanges and drive shaft configurations are available. Porting is through SAE split flange or "O" ring fitting. Special hardened steel alloy gears with integral drive shaft run between pressure-balanced, bronze wear plates to make these rugged pumps highly efficient. Long shaft journals provide superior bearing surfaces and add to long service life.

Pumps can be assembled for rotation in either direction.

Displacement per inch of gear

PGP430	1.97 CIR
PGP450	2.55 CIR
PGP465	3.60 CIR

Performance Data

The performance data shown on the adjacent page are the average results based on a series of laboratory tests of production units and are not necessarily representative of any one unit. Tests were run at 4500 psi with the oil reservoir temperature at 180° F and viscosity of 150 SUS @ 100.

Oil Recommendations

The pumps work well on most good hydraulic oils as well as synthetic and fire resistant fluids. Please check with our Product Support Department before using any fire resistant or non-petroleum based fluid. Some of these products require special seals.

Viscosity – 50 SUS min. @ operating temperature
7500 SUS max. @ starting temperature
Viscosity index – 90 minimum
Analine point – 175 minimum
Additives – Foam depressant
Rust inhibitors
Maximum recommended system operating temperature with standard buna-N seals is 180° F or 83° C.

Dimensional Data

Single Units

Model	A	B	C	D	
PGP 430	6.88	5.88	4.94 + GW	6.19 + GW	Inches
	174.7	149.3	125.5 + GW	157.2 + GW	MM
PGP 450	7.12	6.00	5.56 + GW	7.06 + GW	Inches
	108.8	152.4	141.2 + GW	179.3 + GW	MM
PGP 465	7.38	7.25	5.81 + GW	7.31 + GW	Inches
	187.4	184.1	147.6 + GW	185.7 + GW	MM

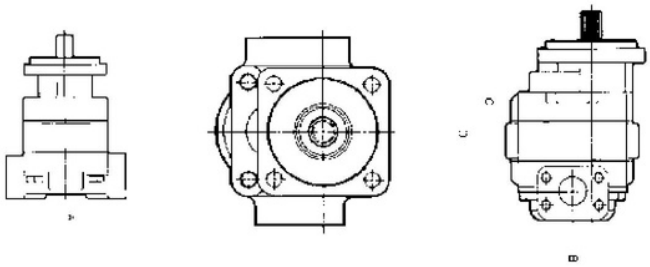

Multiple Units

Model	A	B	C	D	
PGP 430	6.78	5.88	5.38 + GW	9.88 + GW	Inches
	172.2	149.3	136.7 + GW	250.9 + GW	MM
PGP 450	7.68	6.00	5.75 + GW	10.25 + GW	Inches
	195.1	152.4	146.8 + GW	254.6 + GW	MM
PGP 465	8.38	7.25	6.25 + GW	11.38 + GW	Inches
	212.8	184.1	158.7 + GW	289.0 + GW	MM

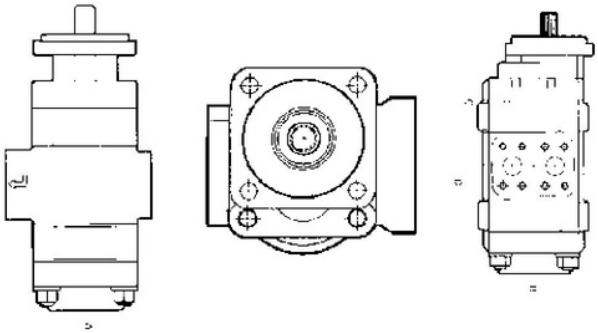

TRIDENT PRECISION INTERNATIONAL
151,SECTOR -06, IMT MANESAR,
GURGAON,HARYANA,122050
0124-4101151
WWW.TRIDENT PRECISION.IN
sales@tridentprecision.in

PGP430 Pumps

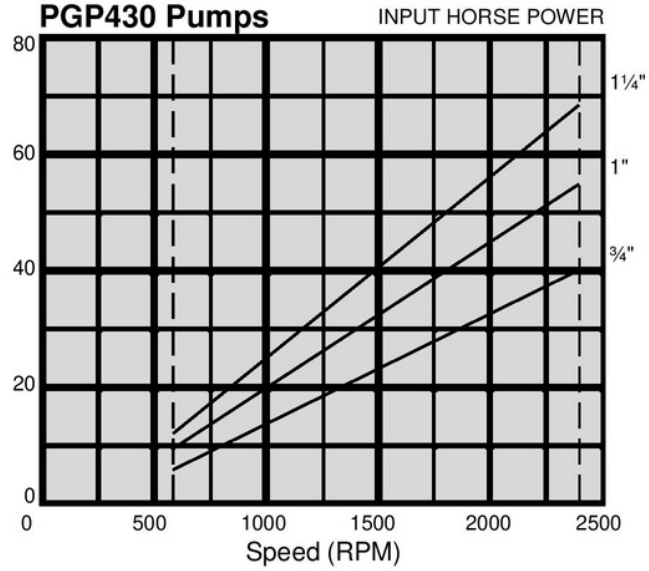

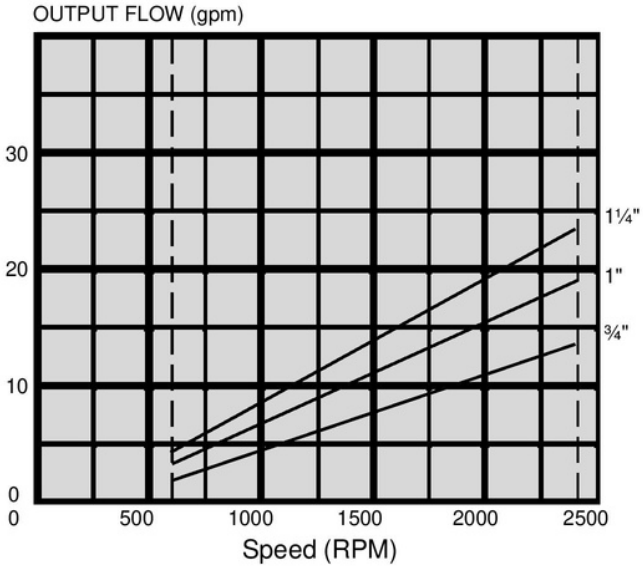

PGP450 Pumps

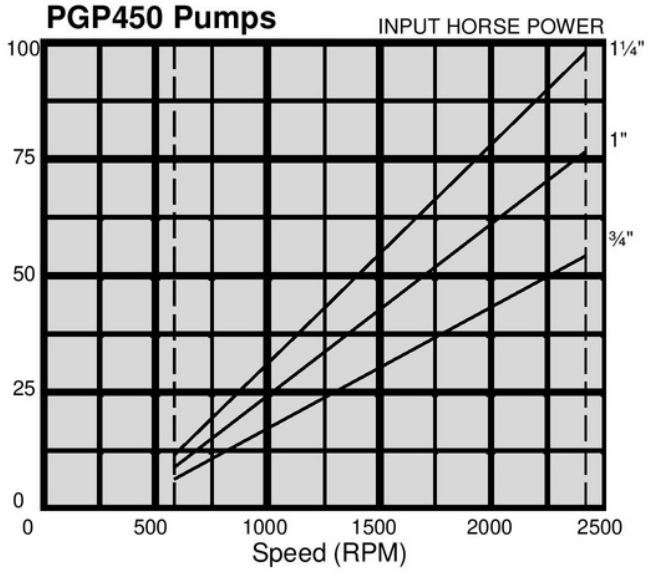

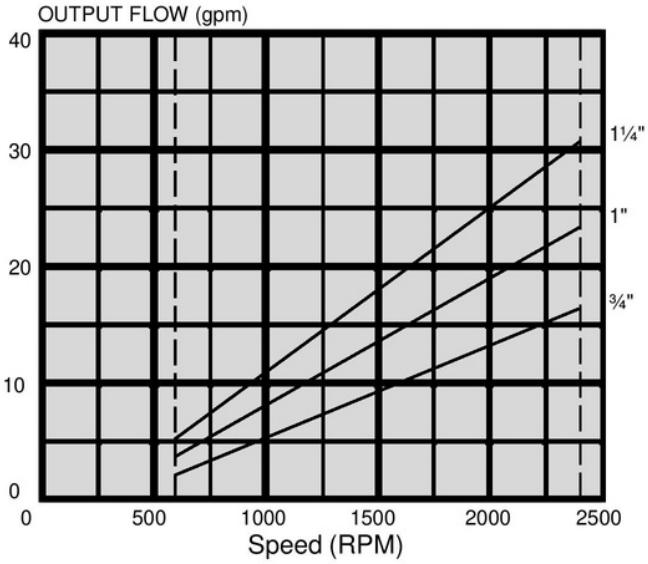

PGP465 Pumps

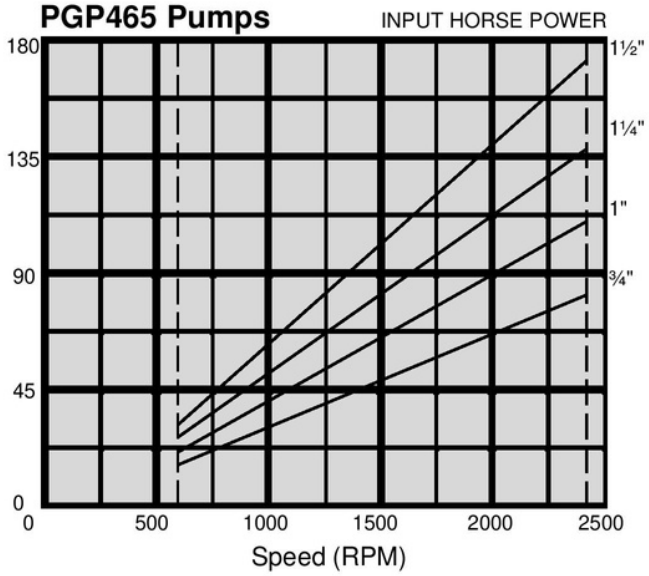

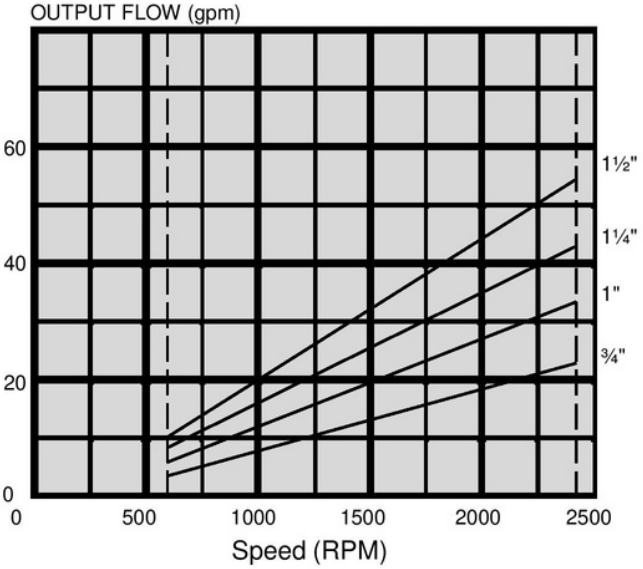

TRIDENT PRECISION INTERNATIONAL
151,SECTOR -06, IMT MANESAR,
GURGAON,HARYANA,122050
0124-4101151 **WWW.TRIDENT PRECISION.IN** **sales@tridentprecision.in**

Special Assemblies for Gear Pumps and Motors

Contact Product Support for more information.

We became the market leading manufacturer of hydraulic gear pumps for mobile equipment by anticipating customer needs and developing engineered solutions to meet them. While we offer a broad range of standard gear pumps and motors for most applications, we recognize that standard equipment may not always be the best solution. We are always ready and able to discuss special applications and provide practical, cost-effective, well-engineered solutions to your special hydraulic system needs. Here are a few examples of our engineering and manufacturing skills.

PGP/PGM315 Series - Special Assemblies

- PGP/PGM315 gears with various drive shafts
- PGP315 port end cover with built-in relief valve Tandem use only - no inlet port available
- PGP315 port end cover with side ports up to 1-1/2" S.F. inlet
- PGP315 port end cover with integral priority valve Built-in relief valve on primary circuit
- Clutch pump mount model available

PGP/PGM330 Series - Special Assemblies

- PGP330 dual outlet pump bearing carrier that will accept a 2-1/2" S.F. inlet port
- PGP/PGM330 gears with optional number of gear teeth (10 tooth gears are standard; 13 tooth gears are optional)
- PGP/PGM330 gears with various drive shafts and gear widths
- PGP330/PGP315 piggyback
- PGP330 port end cover with side ports up to 2" S.F. inlet
- Narrow PGP330 dual rotation port end cover that accepts side and/or rear ports
- Narrow PGP330 port end cover that accepts side and/or rear ports
- PGP330 port end cover that accepts rear threaded ports
- PGP330 port end cover with integral priority valve No relief valve on primary circuit
- PGP330 pad mount shaft end cover with two drive shafts
- PGP330 SAE "B" 2 bolt short shaft end cover
- FD330 flow divider assemblies

PGP/PGM350 Series - Special Assemblies

- PGP/PGM350 gears with optional number of gear teeth (10 tooth gears are standard; 13 tooth gears are optional)
- PGP/PGM350 gears with various drive shafts and gear widths
- PGP350/PGP315 piggyback
- PGP350 add-a-pump port end cover with the ability to mount any pump that has an SAE "A" or "B" 2 bolt mounting flange and SAE "A" or "B" splined drive shaft
- PGP350 port end cover that is shorter and narrower than standard P350 PEC. Accepts 1-1/2" diameter beaded inlet tube
- PGP/PGM350 SAE "C" 4 bolt, ductile iron shaft end cover
- PGP/PGM350 SAE "B" 2 bolt short shaft end cover
- FD350 flow divider assemblies
- Double tapered bearing
- Pad mount

PGP/PGM365 Series - Special Assemblies

- P365 bearing carriers with special porting arrangements accept 3" S.F. inlet ports
- PGP/PGM365 gears with various drive shafts and gear widths
- PGP365/PGP330 piggyback
- PGP365 add-a-pump port end cover with the ability to mount any pump that has an SAE "A" or "B" 2 bolt mounting flange and SAE "A" or "B" splined drive shaft
- PGM365 SAE "C" 4 bolt, compacted graphite shaft end cover
- FD365 flow divider assemblies

T+P
TRIDENT PRECISION INTERNATIONAL
151,SECTOR -06, IMT MANESAR,
GURGAON,HARYANA,122050
0124-4101151
WWW.TRIDENT PRECISION.IN
sales@tridentprecision.in

PGP315 Tandem Pump with Integral Port End Priority Valve

By incorporating the priority flow valve and relief valve in the port end housing, this design puts the added flow of a tandem to good use without requiring excessive mounting space for a bolt-on valve. The integral priority flow valve provides primary and secondary flow ports. Flow in excess of that required by the priority circuit may be routed to a power beyond function. These units may be used to provide power steering or braking requirements.

Load-sense Unloaders

These valves may be bolted to any standard pump outlet or used in-line between the pump and a load-sense control valve. Two sizes handle flows from 0-30 gpm and 30-60 gpm at pressures to 3500 psi. The unloader effectively modulates pump output relative to function pressure and flow requirements.

Charge/Lube Pump

The design of this unit takes advantage of relatively low pressure operating requirements (450 psi.) to reduce the number of cast iron components required for its two pump sections from five pieces to three. Relief valves for both sections are built into the pump body. The common journal carrier, one-piece steel drive shaft, and powdered metal driven gears contribute to the overall compactness of the design while providing charge and transmission lubrication flows.

Through Shaft Pump

An innovative design, this piggyback unit is driven by a common shaft that is actually the drive shaft of the machine to which it supplies two separate flows. The through shaft eliminates the need for a PTO, reduces the number of component parts and contributes to a lighter more compact machine design.

Pump with Shaft End Cover Ports

This unusually-shaped shaft end housing allows it to fit tight mounting spaces while maintaining smooth hydraulic line functions. The housing features integral port lobes that allow straight hydraulic line connections without line kinks or space robbing line loops. Overall length of the pump is reduced by eliminating typical gear housing ports.

Add-A-Pump

This special port end housing for 350 and 365 pumps allows a separate pump to be mounted to the rear of the unit as needed for optional machine functions or to provide flow from a separate reservoir. With bearing, lip seal and drain already in place, this special port end housing can accommodate any add-on pump with SAE A or B two-bolt mounting pattern and splined drive shaft.

T+P
TRIDENT PRECISION INTERNATIONAL
151,SECTOR -06, IMT MANESAR,
GURGAON,HARYANA,122050
0124-4101151
WWW.TRIDENT PRECISION.IN
sales@tridentprecision.in

The items described in this document and other documents or descriptions provided by Parker Hannifin Corporation, its subsidiaries and its authorized distributors are hereby offered for sale at prices to be established by Parker Hannifin Corporation, its subsidiaries and its authorized distributors. This offer and its acceptance by any customer ("Buyer") shall be governed by all of the following Terms and Conditions. Buyer's order for any such items, when communicated to Parker Hannifin Corporation, its subsidiary or an authorized distributor ("Seller") verbally or in writing, shall constitute acceptance of this offer.

1. Terms and Conditions of Sale: All descriptions, quotations, proposals, offers, acknowledgments, acceptances and sales of Seller's products are subject to and shall be governed exclusively by the terms and conditions stated herein. Buyer's acceptance of any offer to sell is limited to these terms and conditions. Any terms or conditions in addition to, or inconsistent with those stated herein, proposed by Buyer in any acceptance of an offer by Seller, are hereby objected to. No such additional, different or inconsistent terms and conditions shall become part of the contract between Buyer and Seller unless expressly accepted in writing by Seller. Seller's acceptance of any offer to purchase by Buyer is expressly conditional upon Buyer's assent to all the terms and conditions stated herein, including any terms in addition to, or inconsistent with those contained in Buyer's offer, Acceptance of Seller's products shall in all events constitute such assent.

2. Payment: Payment shall be made by Buyer net 30 days from the date of delivery of the items purchased hereunder. Amounts not timely paid shall bear interest at the maximum rate permitted by law for each month or portion thereof that the Buyer is late in making payment. Any claims by Buyer for omissions or shortages in a shipment shall be waived unless Seller receives notice thereof within 30 days after Buyer's receipt of the shipment.

3. Delivery: Unless otherwise provided on the face hereof, delivery shall be made F.O.B. Seller's plant. Regardless of the method of delivery, however, risk of loss shall pass to Buyer upon Seller's delivery to a carrier. Any delivery dates shown are approximate only and Seller shall have no liability for any delays in delivery.

4. Warranty: Seller warrants that the items sold hereunder shall be free from defects in material or workmanship for a period of 18 months from date of shipment from Parker Hannifin Corporation. **THIS WARRANTY COMPRISES THE SOLE AND ENTIRE WARRANTY PERTAINING TO ITEMS PROVIDED HEREUNDER. SELLER MAKES NO OTHER WARRANTY, GUARANTEE, OR REPRESENTATION OF ANY KIND WHATSOEVER. ALL OTHER WARRANTIES, INCLUDING BUT NOT LIMITED TO, MERCHANTABILITY AND FITNESS FOR PURPOSE, WHETHER EXPRESS, IMPLIED, OR ARISING BY OPERATION OF LAW, TRADE USAGE, OR COURSE OF DEALING ARE HEREBY DISCLAIMED. NOTWITHSTANDING THE FOREGOING, THERE ARE NO WARRANTIES WHATSOEVER ON ITEMS BUILT OR ACQUIRED WHOLLY OR PARTIALLY, TO BUYER'S DESIGNS OR SPECIFICATIONS.**

5. Limitation Of Remedy: SELLER'S LIABILITY ARISING FROM OR IN ANY WAY CONNECTED WITH THE ITEMS SOLD OR THIS CONTRACT SHALL BE LIMITED EXCLUSIVELY TO REPAIR OR REPLACEMENT OF THE ITEMS SOLD OR REFUND OF THE PURCHASE PRICE PAID BY BUYER, AT SELLER'S SOLE OPTION. IN NO EVENT SHALL SELLER BE LIABLE FOR ANY INCIDENTAL, CONSEQUENTIAL OR SPECIAL DAMAGES OF ANY KIND OR NATURE WHATSOEVER, INCLUDING BUT NOT LIMITED TO LOST PROFITS ARISING FROM OR IN ANY WAY CONNECTED WITH THIS AGREEMENT OR ITEMS SOLD HEREUNDER, WHETHER ALLEGED TO ARISE FROM BREACH OF CONTRACT, EXPRESS OR IMPLIED WARRANTY, OR IN TORT, INCLUDING WITHOUT LIMITATION, NEGLIGENCE, FAILURE TO WARN OR STRICT LIABILITY.

6. Changes, Reschedules and Cancellations: Buyer may request to modify the designs or specifications for the items sold hereunder as well as the quantities and delivery dates thereof, or may request to cancel all or part of this order, however, no such requested modification or cancellation shall become part of the contract between Buyer and Seller unless accepted by Seller in a written amendment to this Agreement. Acceptance of any such requested modification or cancellation shall be at Seller's discretion, and shall be upon such terms and conditions as Seller may require.

7. Special Tooling: A tooling charge may be imposed for any special tooling, including without limitation, dies, fixtures, molds and patterns, acquired to manufacture items sold pursuant to this contract. Such special tooling shall be and remain Seller's property notwithstanding payment of any charges by Buyer. In no event will Buyer acquire any interest in apparatus belonging to Seller which is utilized in the notwithstanding any charges paid by Buyer. Unless otherwise agreed, Seller shall have the right to alter, discard or otherwise dispose of any special tooling or other property in its sole discretion at any time.

8. Buyer's Property: Any designs, tools, patterns, materials, drawings, confidential information or equipment furnished by Buyer or any other items which become Buyer's property, may be considered obsolete and may be destroyed by Seller after two (2) consecutive years have elapsed without Buyer placing an order for the items which are manufactured using such property, Seller shall not be responsible for any loss or damage to such property while it is in Seller's possession or control.

9. Taxes: Unless otherwise indicated on the face hereof, all prices and charges are exclusive of excise, sales, use, property, occupational or like taxes which may be imposed by any taxing authority upon the manufacture, sale or delivery of the items sold hereunder. If any such taxes must be paid by Seller or if Seller is liable for the collection of such tax, the amount thereof shall be in addition to the amounts for the items sold. Buyer agrees to pay all such taxes or to reimburse Seller therefore upon receipt of its invoice. If Buyer claims exemption from any sales, use or other tax imposed by any taxing authority, Buyer shall save Seller harmless from and against any such tax, together with any interest or penalties thereon which may be assessed if the items are held to be taxable.

10. Indemnity For Infringement of Intellectual Property Rights: Seller shall have no liability for infringement of any patents, trademarks, copyrights, trade dress, trade secrets or similar rights except as provided in this Part 10. Seller will defend and indemnify Buyer against allegations of infringement of U.S. Patents, U.S. Trademarks, copyrights, trade dress and trade secrets (hereinafter 'Intellectual Property Rights'). Seller will defend at its expense and will pay the cost of any settlement or damages awarded in an action brought against Buyer based on an allegation that an item sold pursuant to this contract infringes the Intellectual Property Rights of a third party. Seller's obligation to defend and indemnify Buyer is contingent on Buyer notifying Seller within ten (10) days after Buyer becomes aware of such allegations of infringement, and Seller having sole control over the defense of any allegations or actions including all negotiations for settlement or compromise. If an item sold hereunder is subject to a claim that it infringes the Intellectual Property Rights of a third party, Seller may, at its sole expense and option, procure for Buyer the right to continue using said item, replace or modify said item so as to make it noninfringing, or offer to accept return of said item and return the purchase price less a reasonable allowance for depreciation. Notwithstanding the foregoing, Seller shall have no liability for claims of infringement based on information provided by Buyer, or directed to items delivered hereunder for which the designs are specified in whole or part by Buyer, or infringements resulting from the modification, combination or use in a system of any item sold hereunder. The foregoing provisions of this Part 10 shall constitute Seller's sole and exclusive liability and Buyer's sole and exclusive remedy for infringement of Intellectual Property Rights.

If a claim is based on information provided by Buyer or if the design for an item delivered hereunder is specified in whole or in part by Buyer, Buyer shall defend and indemnify Seller for all costs, expenses or judgments resulting from any claim that such item infringes any patent, trademark, copyright, trade dress, trade secret or any similar right.

11. Force Majeure: Seller does not assume the risk of and shall not be liable for delay or failure to perform any of Seller's obligations by reason of circumstances beyond the reasonable control of Seller (hereinafter 'Events of Force Majeure'). Events of Force Majeure shall include without limitation, accidents, acts of God, strikes or labor disputes, acts, laws, rules or regulations of any government or government agency, fires, floods, delays or failures in delivery of carriers or suppliers, shortages of materials and any other cause beyond Seller's control.

12. Entire Agreement/Governing Law: The terms and conditions set forth herein, together with any amendments, modifications and any different terms or conditions expressly accepted by Seller in writing, shall constitute the entire Agreement concerning the items sold, and there are no oral or other representations or agreements which pertain thereto. This Agreement shall be governed in all respects by the law of the State of Ohio. No actions arising out of the sale of the items sold hereunder or this Agreement may be brought by either party more than two (2) years after the cause of action accrues. 9/91P

T+P
TRIDENT PRECISION INTERNATIONAL
151,SECTOR -06, IMT MANESAR,
GURGAON,HARYANA,122050
0124-4101151
WWW.TRIDENT PRECISION.IN
sales@tridentprecision.in

Catalog HY09-0300/US

Parker Hannifin Corporation
6035 Parkland Blvd.
Cleveland, Ohio 44124-4141
Telephone: (216) 896-3000
Fax: (216) 896-4000
Web site: www.parker.com

Parker Hannifin Corporation

About Parker Hannifin Corporation

Parker Hannifin is a leading global motion-control company dedicated to delivering premier customer service. A Fortune 500 corporation listed on the New York Stock Exchange (PH), our components and systems comprise over 1,400 product lines that control motion in some 1,000 industrial and aerospace markets. Parker is the only manufacturer to offer its customers a choice of hydraulic, pneumatic, and electromechanical motion-control solutions. Our Company has the largest distribution network in its field, with over 7,500 distributors serving more than 350,000 customers worldwide.

Parker's Charter

To be a leading worldwide manufacturer of components and systems for the builders and users of durable goods. More specifically, we will design, market and manufacture products controlling motion, flow and pressure. We will achieve profitable growth through premier customer service.

Product Information

North American customers seeking product information, the location of a nearby distributor, or repair services will receive prompt attention by calling the Parker Product Information Center at our toll-free number: 1-800-C-PARKER (1-800-272-7537). In the UK, a similar service is available by calling 0500-103-203.

The Aerospace Group is a leader in the development, design, manufacture and servicing of control systems and components for aerospace and related high-technology markets, while achieving growth through premier customer service.

The Climate & Industrial Controls Group designs, manufactures and markets system-control and fluid-handling components and systems to refrigeration, air-conditioning and industrial customers worldwide.

The Fluid Connectors Group designs, manufactures and markets rigid and flexible connectors, and associated products used in pneumatic and fluid systems.

The Seal Group designs, manufactures and distributes industrial and commercial sealing devices and related products by providing superior quality and total customer satisfaction.

The Hydraulics Group designs, produces and markets a full spectrum of hydraulic compnents and systems to builders and users of industrial and mobile machinery and equipment.

The Filtration Group designs, manufactures and markets quality filtration and clarification products, providing customers with the best value, quality, technical support, and global availability.

The Automation Group is a leading supplier of pneu-matic and electro-mechanical components and systems to automation customers worldwide.

The Instrumentation Group is a global leader in the design, manufacture and distribution of high-quality critical flow components for worldwide processinstrumentation, ultra-high-purity, medical and analytical applications.

T+P
TRIDENT PRECISION INTERNATIONAL
151,SECTOR -06, IMT MANESAR,
GURGAON,HARYANA,122050
0124-4101151
WWW.TRIDENT PRECISION.IN
sales@tridentprecision.in